DAIKIN

SiBE811120

# Service Manual

# Photocatalytic Air Purifier
# L-Series

# Photocatalytic Air Purifier L-Series

## MC70LVM


1. Precautions for Use....2
   1.1 Required Conditions....2
2. Functions....3
3. Specifications....4
   3.1 Specifications....4
   3.2 Dimensions....5
   3.3 Wiring Diagram....6
   3.4 Packaging Drawing....7
4. Operation Manual....8
   4.1 Features....8
   4.2 Safety Precautions....10
   4.3 Name and Operation of Each Part....13
   4.4 Preparation before Operation....16
   4.5 How to Operate....20
   4.6 Quick Reference Table of Maintenance....22
   4.7 Removing and Attaching Each Part....24
   4.8 Cleaning of UNIT1 and UNIT2....26
   4.9 Replacement of the Pleated Filter....28
   4.10 Sensitivity Setting of the Air Quality Sensor (Dust Sensor)....29
5. Childproof Lock Function: Special Mode....30
6. Optional Accessories....31
   6.1 Pleated Filter (Titanium Apatite Photocatalytic Filter) - KAC017A4E....31
7. Troubleshooting....32
   7.1 Frequently Asked Question....32
   7.2 Check before Requesting Servicing....33
   7.3 Diagnosis....35
8. Wiring Check after Replacing PCBs....36
9. Removal Procedure....37
   9.1 Removal of Front Panel / Filters....37
   9.2 Removal of Streamer Unit....45
   9.3 Removal of Ionized Wire....46
   9.4 Removal of Control / Display PCB....47
   9.5 Removal of Fan Motor....49
   9.6 Removal of Power Supply PCB / High Voltage PCB....53
   9.7 Removal of Power Cord....56

# 1. Precautions for Use

## 1.1 Required Conditions

**Power Supply**

1 ϕ, 220 - 240 V, 50 Hz
1 ϕ, 220 - 230 V, 60 Hz

**Precautions**

- This product is for home use. Never use for other purposes.
- This product is for indoor use only. Do not use in bathroom or outdoor as it is not water/condensation proof.
- Do not modify this product.

# 2. Functions

| Category | Functions | | MC70LVM |
|---|---|---|---|
| Basic Function | Odor sensor | | ○ |
| | Dust sensor | | ○ |
| | 3-directional suction | | ○ |
| Health & Comfort | Flash streamer discharge | | ○ |
| | Number of streamer needle | | 6 |
| | Pre-filter | | ○ |
| | Electrostatic filter | | ○ |
| | Pleated filter (Titanium apatite photocatalytic filter) | Performance | 2 years / 1 sheet |
| | | Quantity | 1 + 4 sheets |
| | Deodorizing catalyst | | ○ |
| Lifestyle Convenience | Automatic airflow rate | | ○ |
| | Anti-pollen operation | | ○ |
| | Turbo operation | | ○ |
| | Sleep mode operation | | ○ |
| | Odor sensor lamp | | ○ |
| | Dust sensor lamp | | ○ |
| | LED brightness adjustment | | ○ |
| | OFF timer (hours) | | 1 · 2 · 4 |
| | Childproof lock | | ○ |
| | Cabtyre cable | | ○ |
| | Remote controller storage | | ○ |
| | Quick-wipe panel | | ○ |
| | Filter replacement indicator | | ○ |
| | Plasma ionizer cleaning indicator | | ○ |
| | Streamer unit cleaning indicator | | ○ |
| Remote Controller | Wireless remote controller (ARC) | | 458A7 |

# 3. Specifications

## 3.1 Specifications

**50 Hz, 220 - 230 - 240 V / 60 Hz, 220 - 230 V**

| Model | | | MC70LVM |
|---|---|---|---|
| Type | | | Photocatalytic air purifier |
| Applicable room area | | m² | 46 |
| Color | | | ★1: See the note below. |
| Power consumption (HH / H / M / L / LL) | | W | 65 / 26 / 16 / 10 / 7 |
| Running current (HH / H / M / L / LL) | | A | 0.55 / 0.25 / 0.15 / 0.10 / 0.08 |
| Operating sound ★2 (HH / H / M / L / LL) | | dB(A) | 63 / 54 / 47 / 39 / 31 |
| Fan | Type | | Multi blade fan (Sirocco fan with shroud assembly) |
| | Airflow rate (HH / H / M / L / LL) | m³/h | 420 / 285 / 210 / 130 / 55 |
| | Running method | | Direct drive |
| Dust collecting method | | | Plasma ionizer + Electrostatic dust collection filter |
| Deodorizing method | | | Flash streamer + Titanium apatite photocatalytic filter + Deodorizing catalyst |
| Air filter | | | Polypropylene net |
| Bacteria filtering method | | | Flash streamer + Titanium apatite photocatalytic filter |
| Sign | Sensor lamp | | Dust sensor: 3 stages, Odor sensor: 3 stages |
| | Airflow rate | | Auto / LL / L / M / H |
| | Operation mode | | Turbo (HH), Anti-pollen, Sleep |
| | Maintenance sign | | Filter replacement, Plasma ionizer cleaning, Streamer unit cleaning |
| | OFF timer | | 1 · 2 · 4 hours |
| | Others | | Childproof Lock |
| Dimensions (H × W × D) | | mm | 576 × 403 × 241 |
| Packaged dimensions (H × W × D) | | mm | 615 × 445 × 280 |
| Product weight | | kg | 8.5 |
| Gross weight | | kg | 11 |
| Safety device | | | Safety switch (Operation stops when the front panel is opened.) |
| Power cord | | m | 2.0 |
| Accessories | | | Operation manual (1), Wireless remote controller (1), Pleated filter (1 + 4) |
| Drawing number | | | 4D072161 |

**Note:** ★1. The colors are shown as below.

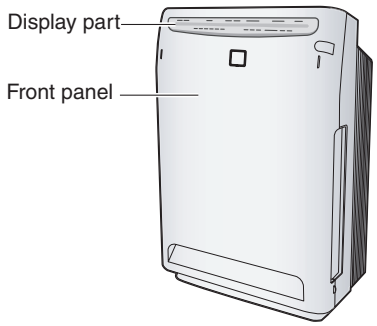


| Front panel | Display part |
|---|---|
| White | Silver |

(R13826)

★2. Operating sound levels are the average of values measured at 1 m away from the front, left, right and top of the unit.
(This equals to the value in an anechoic chamber.)

# 3.2 Dimensions

## MC70LVM

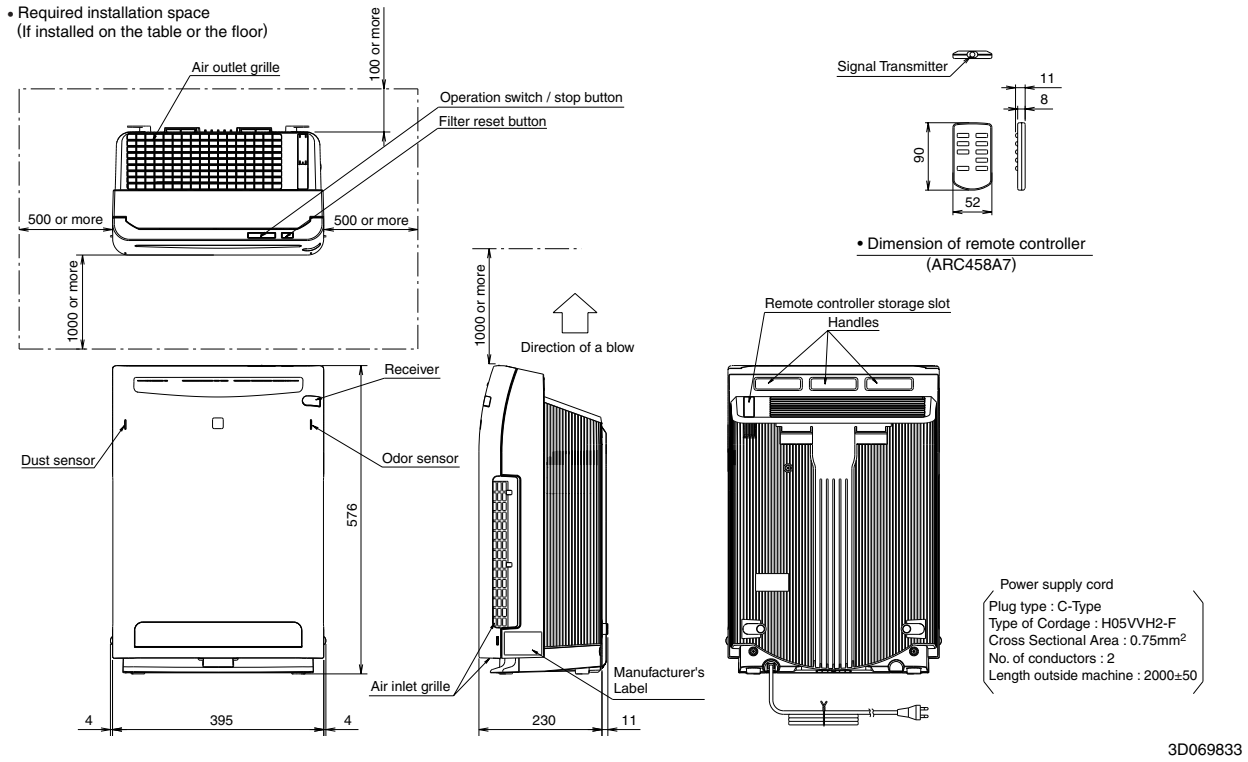

# 3.3 Wiring Diagram

## MC70LVM

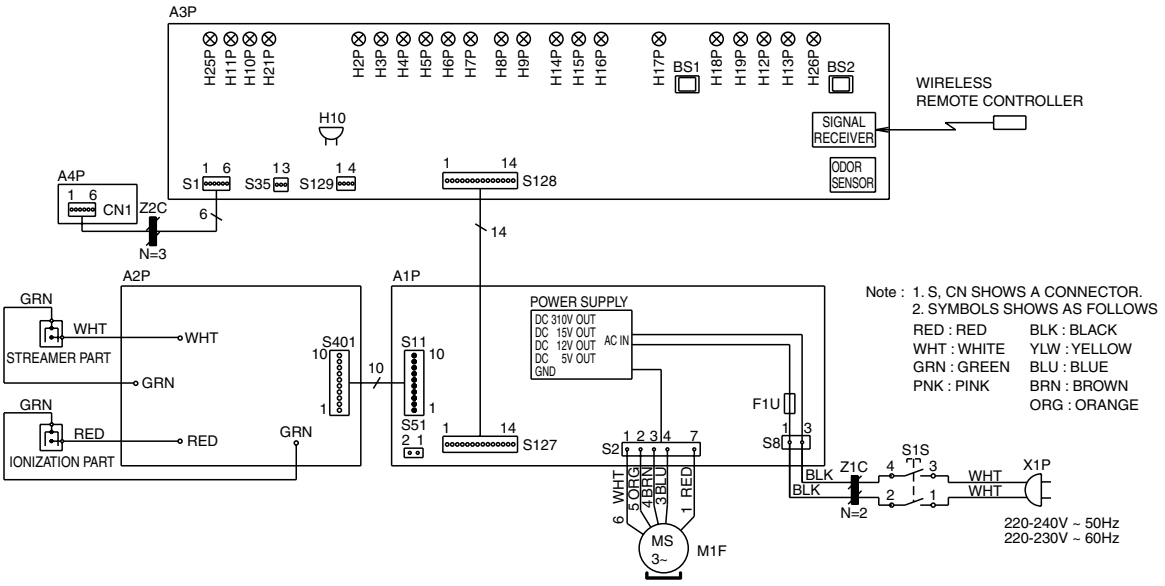


| | | | | | | | | | |
|---|---|---|---|---|---|---|---|---|---|
| H10 | BUZZER 1(RECEIVING SIGN) | M1F | FAN MOTOR | H6P | LED(H:GREEN) | H12P | LED(ODOR SIGN:GREEN) | H18P | LED(CLEANING OF IONIZATION PART:ORANGE) |
| S1S | SAFETY SWITCH | BS1 | MAIN SWITCH | H7P | LED(TURBO:ORANGE) | H13P | LED(ODOR SIGN:YELLOW) | H19P | LED(CLEANING OF STREAMER PART:ORANGE) |
| A1P | PRINTED CIRCUIT BOARD (FOR POWER SUPPLY) | BS2 | FILTER RESET SWITCH | H8P | LED(ANTI-POLLEN:GREEN) | H26P | LED(ODOR SIGN:RED) | H21P | LED(CHILD LOCK:ORANGE) |
| A2P | PRINTED CIRCUIT BOARD (FOR HIGH VOLTAGE POWER SUPPLY UNIT) | H2P | LED(AUTO OPERATION:YELLOW) | H9P | LED(SLEEP:GREEN) | H14P | LED(CUT OFF TIMER(1 HOUR):YELLOW) | X1P | POWER SUPPLY PLUG |
| A3P | PRINTED CIRCUIT BOARD (FOR DISPLAY / CONTROL) | H3P | LED(LL:GREEN) | H10P | LED(DUST SIGN:GREEN) | H15P | LED(CUT OFF TIMER(2 HOUR):YELLOW) | Z1C | FERRITE CORE |
| A4P | DUST SENSOR | H4P | LED(L:GREEN) | H11P | LED(DUST SIGN:YELLOW) | H16P | LED(CUT OFF TIMER(4 HOUR):YELLOW) | Z2C | FERRITE CORE |
| F1U | FUSE(250V, 3.15A) | H5P | LED(M:GREEN) | H25P | LED(DUST SIGN:RED) | H17P | LED(FILTER REPLACEMENT:ORANGE) | | |

3D069834

# 3.4 Packaging Drawing

**MC70LVM**

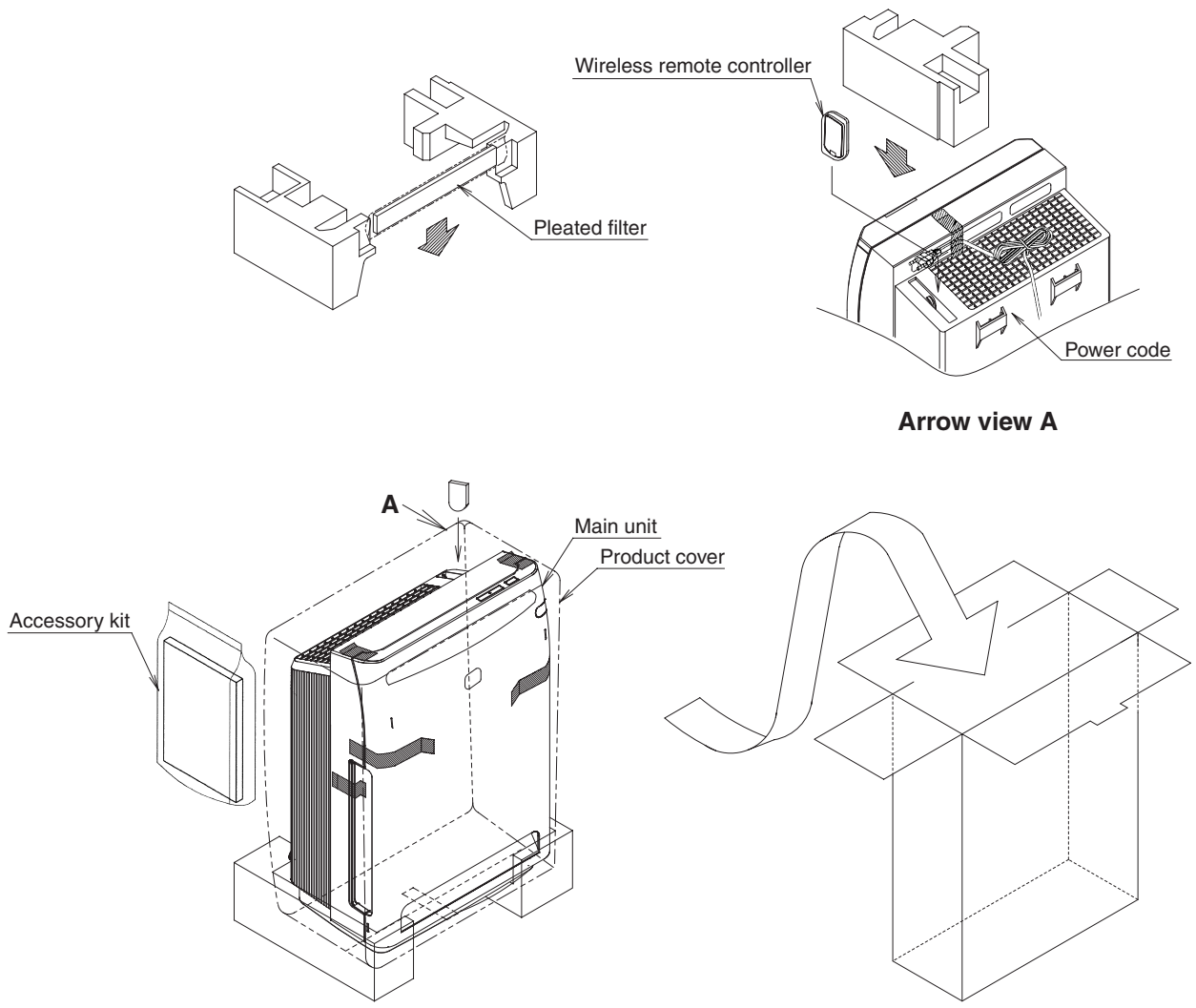

# 4. Operation Manual

## 4.1 Features

# Features

### About air purifying

**The powerful suction of a high airflow rate captures dust, pollen, etc.**

- The purifying capacity improves as the airflow rate increases.

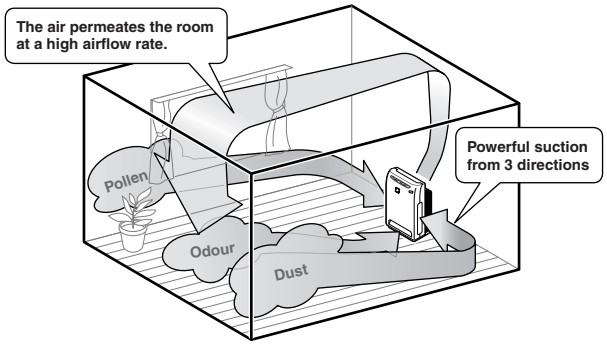


**Effective against pollen**
With the high airflow rate, even pollen that readily settles because of its large particle size is quickly caught.

### Deodorising and decomposing odour in the air

**The streamer discharge decomposes absorbed odour.**

- The decomposition cycle that maintains deodorising capability.

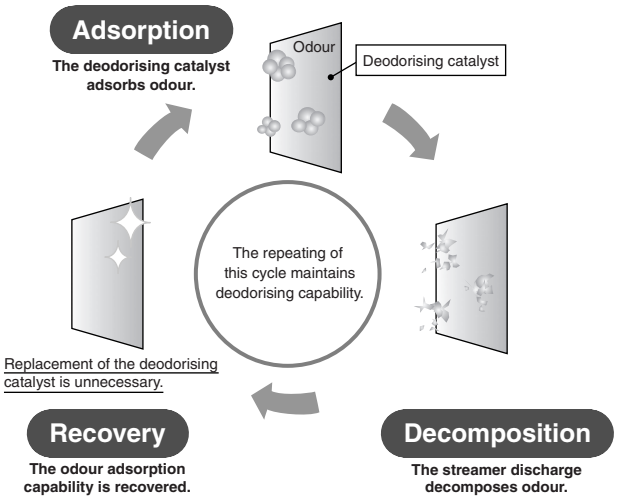


1

## What is the “Streamer” function?

This function uses a “streamer discharge”, a type of plasma discharge, to generate high-speed electrons with strong oxidation power inside the air purifier, reducing or removing odour swiftly. (The high-speed electrons are generated and absorbed within the unit to ensure your safety.)

The hissing sound of the streamer discharge may be heard during operation. It does not indicate any operational issue. In addition, the sound may become lower or the sound quality may change according to the operating environment. These cases are also not operational issues. You may smell an odour as a particle of ozone is generated. The amount is negligible, and does not harm your health.

2

## 4.2 Safety Precautions

# Safety Precautions

■ Before use, read these Safety Precautions to ensure proper handling of equipment.
■ The precautions used in this manual are classified into the following two types. Both contain important safety information, therefore observe them at all times.

| | | | |
|---|---|---|---|
| WARNING | Improper handling may lead to serious injury or even death. | CAUTION | Improper handling may lead to injury or property damage.<br>In some situations, the consequences may be grave. |

■ The icons used in this manual mean the following.

| | | | | | | | |
|---|---|---|---|---|---|---|---|
| | Never do. | | Be sure to follow the instructions. | | Disconnect the power plug. | | Keep away from flames. |
| | Do not disassemble. | | Do not handle with wet hands. | | Do not wet. | | |

■ After reading this manual, keep it in a handy place for future reference by users.

## WARNING

**Power supply cord and plug**

- **Use only a 220-240V power supply.**
  Other power supplies may lead to fire or electric shock.
- **Do not damage, remodel, bend unreasonably, pull, twist or use the power supply cord bundled up.**
  **Also, do not place heavy objects on or pinch the power supply cord.**
  Damage to the power supply cord may lead to fire or electric shock.
- **Do not use the unit when the power supply cord or the power plug is damaged or plugged loosely into an electrical socket.**
  A damaged or loose cord or plug may lead to fire because of a short circuit or electric shock.
- **Do not use the unit beyond the rating of the electrical socket or branching device.**
  Exceeding the rating of multiple socket outlets may lead to fire because of overheating.
- **Do not connect or disconnect the power plug to turn the unit ON / OFF.**
  Abusive handling may lead to electric shock or fire because of overheating.

- **Insert the power plug into the electrical socket all the way to the base.**
  Incomplete connections may lead to electric shock or fire because of overheating.
- **Periodically clean the dust and other matter from the power plug with a dry cloth.**
  Insulation failure caused by humidity or other factors may lead to fire.
- **Stop operation and disconnect the power plug if you detect anything strange such as burning odours.**
  Continued use of the unit without resolving abnormalities such as burning odours may lead to electric shock or fire because of overheating.
  Consult your dealer.
- **If the power supply cord is damaged, it must be replaced by the manufacturer, dealer or qualified persons in order to avoid a hazard.**
  A damaged cord may lead to electric shock or fire because of overheating.
- **To reduce the risk of electric shock, this equipment has a polarized plug (one blade is wider than the other). This plug will fit in a polarized outlet only one way. If the plug does not fit fully in the outlet, reverse the plug. If it still does not fit, contact qualified personnel to install the proper outlet. Do not alter the plug in any way.**

- **Before cleaning or relocating the unit, stop operation and disconnect the power plug from the electrical socket.**
  Handling the unit while it is plugged in may lead to electric shock or damage.

**Main unit**

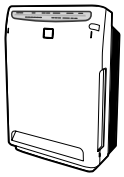

- **Do not use the unit anywhere there is airborne oil such as machine oil.**
  Airborne oil may lead to cracking, electric shock or ignition.
- **Do not use the unit anywhere there are abundant oil vapours such as in kitchens, combustible or corrosive gases, or metallic dust.**
  These kinds of environments may lead to fire or damage.
- **Keep fingers and objects out of the air inlets, air outlet and other openings.**
  Improper handling may lead to electric shock, injury or damage.
- **Do not wet the air outlet or unit frame.**
  Contact with water may lead to fire or electric shock.

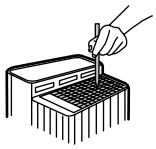

3

## WARNING

### Main unit

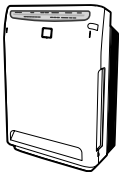

- **Do not use combustible substances, i.e., hair spray, insecticides, etc., near the unit.**
  **Do not wipe the unit with benzene or thinner.**
  These substances may lead to cracking, electric shock or ignition.
- **Use a neutral detergent to clean the unit.**
  Use of chlorine or acidic detergents to clean the unit may generate harmful gas and harm health.

- **These servicing instructions are for use by qualified personnel only. To reduce the risk of electric shock, do not perform any servicing other than that contained in the operating instructions unless you are a professional and qualified to do so.**
- **Keep cigarettes, incense and other naked flames away from the unit.**
  Naked flames may lead to fire.
- **Do not disassemble, remodel or service the unit by yourself.**
  Improper handling may lead to fire, electric shock or injury.
  Consult your dealer.
- **Do not operate the unit with wet hands.**
  Contact with water may lead to electric shock.

- **Do not use the unit anywhere which is very humid such as bathrooms or which experiences sudden temperature changes such as cold storage boxes.**
  Improper environments may lead to electric shock or damage.

## CAUTION

### Power supply cord and plug

- **Hold the power plug – not the power supply cord – and pull to disconnect the unit.**
  Pulling on the power supply cord may lead to fire or electric shock because of short circuits.

- **Before long periods of disuse, disconnect the power plug from the electrical socket.**
  Degraded insulation may lead to electric shock, current leaks or fire.

### Main unit

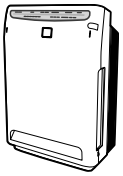

- **Do not use the unit anywhere it is exposed to direct sunlight, rain or wind.**
  Overheating or contact with water may lead to fire or electric shock.
- **Do not use the unit anywhere which is hot such as near heaters.**
  High temperature may discolour or deform the unit.
- **Do not block the air inlets or air outlet with laundry, cloth, curtains, etc.**
  Adhered lint may obstruct the air passage, possibly leading to overheating and fire.
- **Do not use the unit on an uneven floor.**
  If the unit topples over, water may spill from it, possibly wetting furniture or leading to fire or electric shock.
  If the unit topples over, put it upright immediately.
- **Do not use the unit anywhere chemicals are handled.**
  Volatile chemicals or solvents (found in hospitals, factories, test labs, beauty salons, photo developing labs, etc.) may degrade mechanical parts, possibly causing water leaks which may wet furniture, etc.
- **Do not use powders such as cosmetics near the unit.**
  Contact with powders may lead to electric shock or damage.
- **Do not use the unit in cramped spaces such as closets.**
  Poor ventilation may lead to overheating and fire.

# Safety Precautions

## ⚠ CAUTION

### Main unit

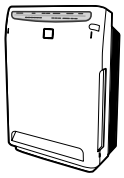

- **Do not expose plants or animals to direct air currents from the unit.**
  Overexposure to air currents may have adverse effects.
- **Keep fish tanks, vases and other water containers away from the unit.**
  Water infiltration into the unit may lead to electric shock, fire or damage.
- **Do not climb, sit or lean on the unit.**
  Falling or toppling over may lead to injury.
- **Do not remove the filter with the unit lying on its side.**
  Handling of this sort facilitates dust infiltration, possibly leading to fire or electric shock.
- **Do not use the unit close to lighting equipment (within 1m).**
  The response of the main unit to the signal from the remote controller may be weakened and the colour of the unit may change.

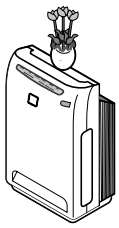

- **Regularly ventilate the room when using the unit in conjunction with combustion appliances.**
  Inadequate ventilation may lead to carbon monoxide poisoning.
  **This product does not remove carbon monoxide.**
- **This product is not intended to be used by persons with reduced physical, sensory or mental capabilities, or with a lack of operation knowledge, unless they are given supervision or instruction concerning appliance use by the person responsible for their safety. Keep the appliance out of children's reach to ensure that they do not play with it.**
- **Unplug the unit during cleaning.**
  Handling the unit while it is plugged in may lead to electric shock or damage.
- **This equipment should be inspected frequently and collected dirt removed from it regularly to prevent excessive accumulation which may result in flashover or a risk of fire.**

### Other

- **If you use the unit where pets are kept, be careful that pets do not urinate on the unit or bite the power supply cord.**
  This may lead to electric shock or fire. In the event of abuse by pets, stop operation, disconnect the power plug and consult your dealer.
- **Do not use combustion appliances where they are directly exposed to air currents from the air outlet.**
  Incomplete combustion by the combustion appliance may lead to carbon monoxide poisoning, etc.
- **As using indoor fumigating insecticides, stop operation to prevent chemicals from being sucked into the unit.**
  Because chemicals accumulate inside the unit, some persons may, depending on their physical condition, be hypersensitive and have their health jeopardized as a result.

### Precautions during use

- **Keep TVs, radios, stereos, radio clocks and antenna wires at least 2m away from the unit.**
  The effects of the power circuit inside the unit and cable may cause a distorted TV picture or noise.
  (However, audio interference may occur even beyond 2m depending on the strength of the electric waves. Reception is particularly hindered when using indoor antennas, therefore distance antennas far enough away to prevent noise from being picked up.)
- **Do not use the unit in the place of kitchen fans or stove hoods.**
  This kind of use may shorten the service life of the prefilter and the pleated filter, possibly leading to damage.
- **Do not use the unit to preserve artwork, academic materials, etc., or for commercial or other special applications.**
  This kind of use may place the quality of preserved objects.
- **Correctly attach parts after cleaning the unit.**
  Using the unit with parts such as filters removed may lead to damage.

**Streamer discharge and electric dust collection**

- Odour may escape from the air outlet due to the slight amount of ozone generated, but the amount is negligible and human health is not affected.

**This product does not remove the harmful substances (carbon monoxide, etc.) in cigarette smoke.**

5

## 4.3 Name and Operation of Each Part

# Name and Operation of Each Part

### Front

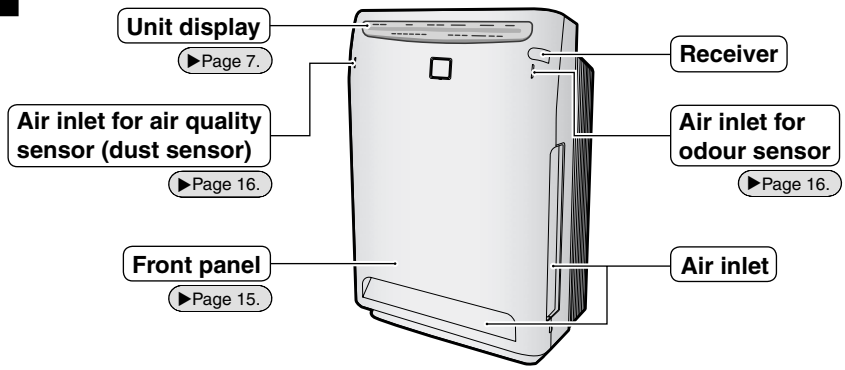


### Rear

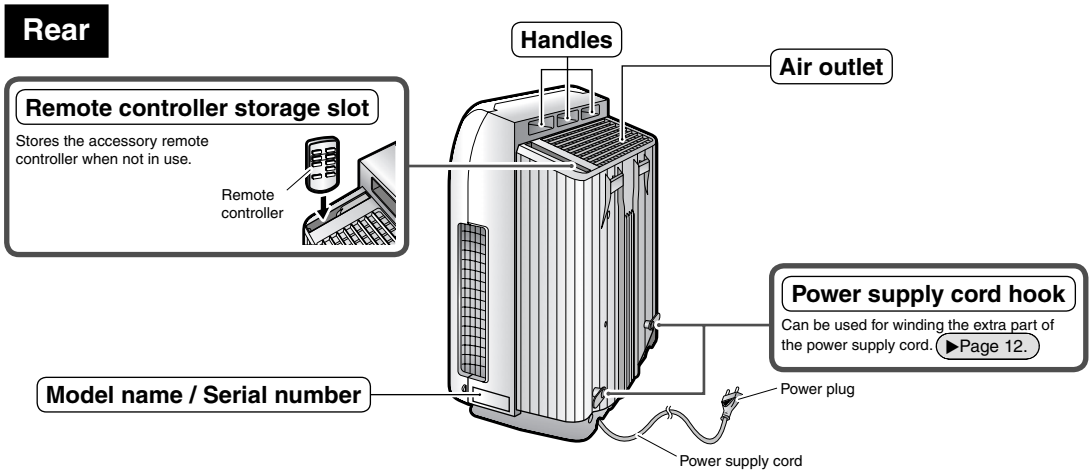


### Inside of the unit

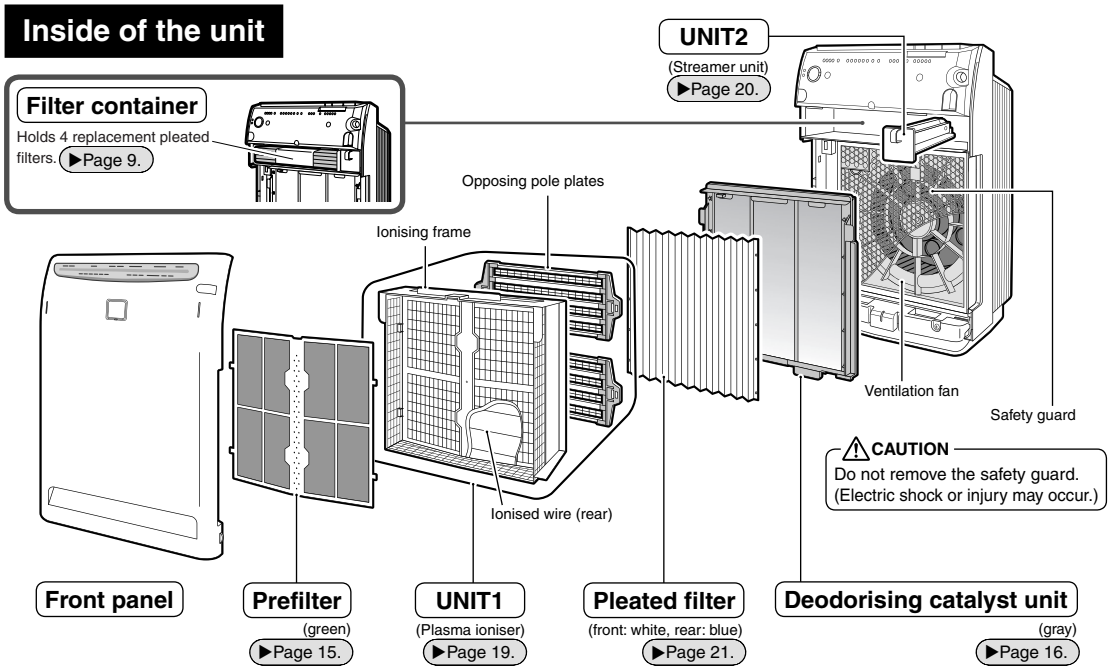


6

# Name and Operation of Each Part

## Remote controller

▶Page 13, 14.

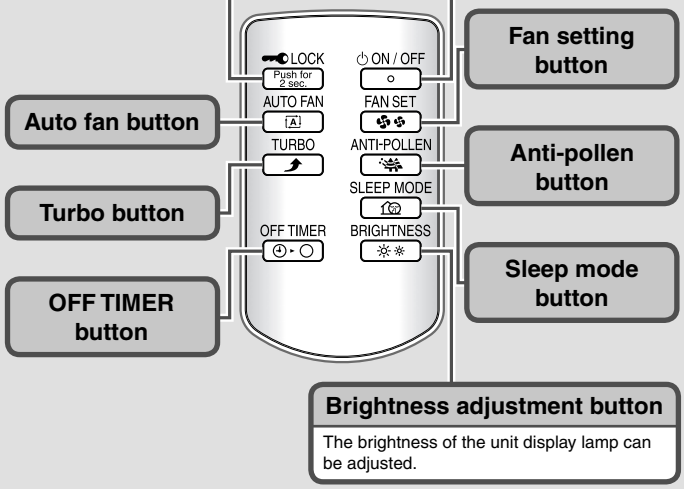


## Unit display

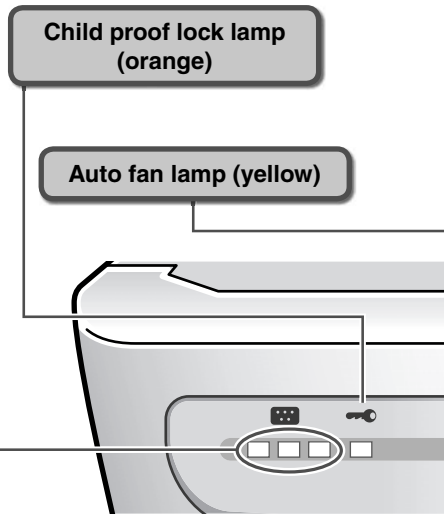


**Airflow rate lamp (green)**

An airflow rate lamp indicates the airflow rate during " (Auto fan)" and "airflow manual" operation.

### Air quality sensor lamp (dust sensor)

**The three-colour indicators (green, yellow, red) indicate how unclean the air is.**

- When the air is clean, the green lamp lights up.

■ **In the following case, only the green lamp lights up for the initial 7 seconds regardless of the uncleanness level.**

**1) Operation directly after attaching the front panel and UNIT1**
**2) Operation directly after reconnecting the power plug**

■ When the sensitivity of the air quality sensor is poor, change the setting. ▶Page 22.

■ The sensitivity of the air quality sensor may fall depending on the installation site or the size of particles.
If this bothers you, change the installation site of the unit ▶Page 11. or adjust the sensitivity of the air quality sensor. ▶Page 22.

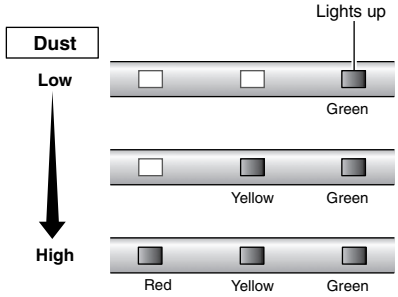


| | |
|---|---|
| Detectable | Cigarette smoke, pollen, ticks, house dust, animal hair, diesel soot |
| Sometimes detectable | Steam, oil vapours |

7

### Operation lamp

- Turbo lamp (orange)
- Anti-pollen lamp (green)
- Sleep mode lamp (green)

### ON / OFF / Mode change button

The operation mode changes each time the button is pressed.

▶Page 14.

### Filter reset button

The filter lamp is turned off by pressing the button for 5 seconds after the pleated filter is replaced with a new one.

▶Page 21.

### OFF TIMER lamp (yellow)

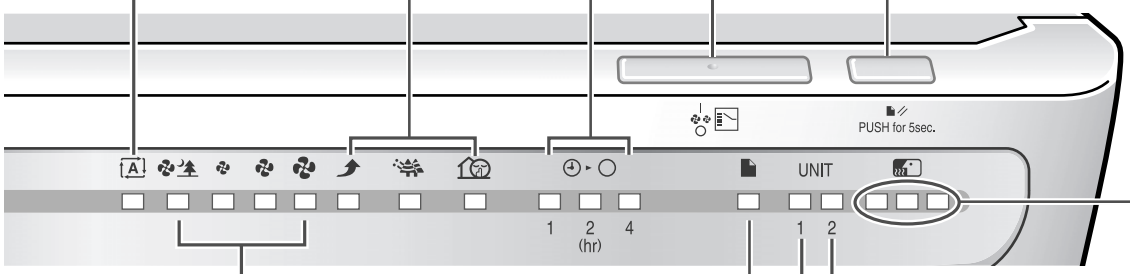


### Filter lamp (orange)

The filter lamp lights up when the pleated filter needs replacement and starts blinking when a certain time has elapsed after the lamp turned on.

▶Page 21.

### UNIT lamp (orange)

- "UNIT1" → This lamp lights up when it is time to clean the plasma ioniser.
- "UNIT2" → This lamp lights up when it is time to clean the streamer unit.

▶Page 19, 20.

- Even when the lamp does not light up, clean the streamer unit once every 3 months.

### Odour sensor lamp

**The three-colour indicators (green, yellow, red) indicate the odour level.**

- When the air is clean, the green lamp lights up.

■ **In the following case, only the green lamp lights up for the initial 1 minute. The initial level of odour is recorded as the standard level.**

**1) Operation directly after attaching the front panel and UNIT1**
**2) Operation directly after reconnecting the power plug**

■ If the odour level remains constant without intensifying or weakening, the odour sensor may not detect even strong odours.

■ The odour sensor may not detect certain types of odours such as pet odours other than ammonia, garlic, etc.

■ Even if only the green lamp lights up, you may notice some smell because the sensitivity is different among individuals.
If bothered by odours, set airflow manual operation and run the unit at a higher airflow rate.

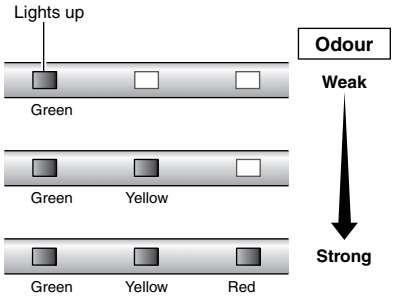


| | |
|---|---|
| Detectable | Cigarette odours, cooking odours, pet and toilet odours, raw waste odours, mildew odours, sprays, alcohol |
| Sometimes detectable | Sudden changes in temperature and humidity, odourless gases such as carbon monoxide, steam, oil vapours, gas from combustion appliances |

8

# 4.4 Preparation before Operation

# Preparation before Operation

## ■ Accessories check

Confirm all the accessories are included.

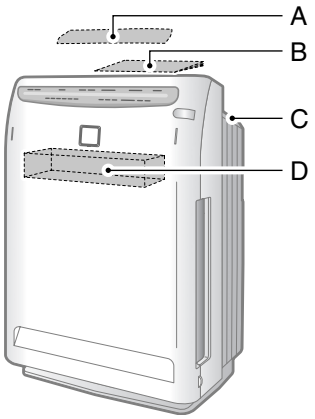


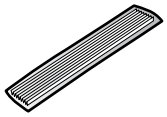

A: Pleated filter…1 sheet
< For initial installation >
Inside cushion

B: Operation manual…1 book
(This booklet)
Inside package

C: Remote controller…1 unit
In remote controller storage slot

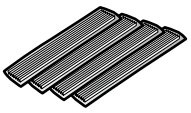

D: Pleated filters…4 sheets
< Replacement filters >
In filter container

## ■ How to attach the pleated filter

Make sure to attach the pleated filter before starting operation.

### 1 Remove the front panel.

- Push the 2 clips (right and left), and pull the front panel upward and remove it.

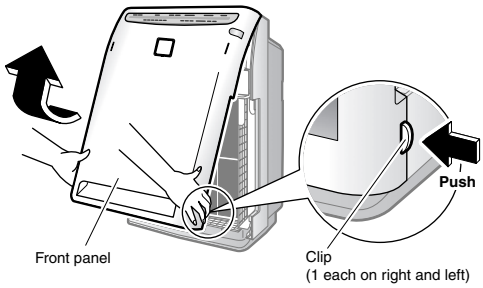


### 2 Remove UNIT1.

- Holding UNIT1 by the handles, pull UNIT1 upward and remove it.

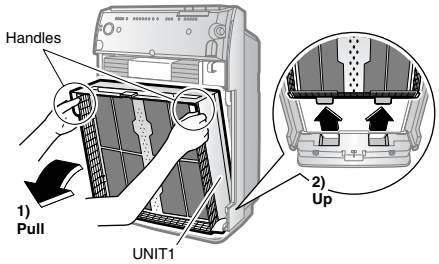


### 3 Remove the deodorising catalyst unit.

- Holding the deodorising catalyst unit by the handles, pull the deodorising catalyst unit upward and remove it.

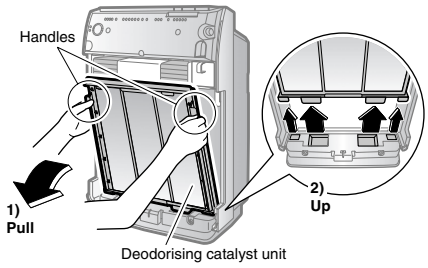


9

## 4 Attach the pleated filter.

Make sure to set the prefilter (green) and the pleated filter (front: white, rear: blue) in place.
If you operate the unit without them, the unit may be damaged.

1) Fit the holes (5 each on the right and left) of the pleated filter to the fixing lugs (5 each on the right and left) of the deodorising catalyst unit.

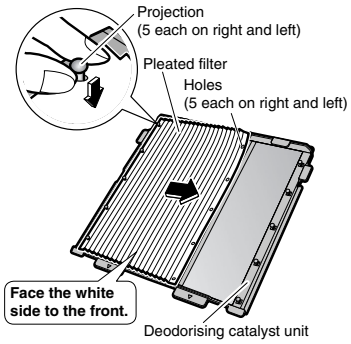


2) Insert the pleated filter underneath the tabs (4 locations) at the top and bottom of the deodorising catalyst unit.

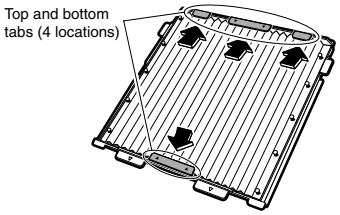


- Unit performance drops if the pleated filter is attached backward.

## 5 Attach the deodorising catalyst unit.

- Holding the deodorising catalyst unit by the handles, fit the projections into the grooves (4 locations) at the bottom of the main unit and press the deodorising catalyst unit into the main unit.

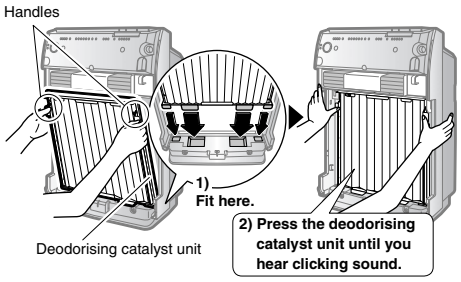


## 6 Attach UNIT1.

- Holding UNIT1 by the handles, fit the projections into the grooves (2 locations) at the bottom of the main unit, and press UNIT1 into the main unit.

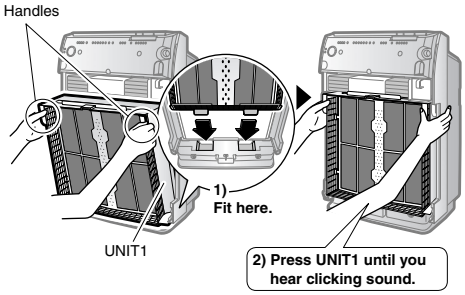


## 7 Attach the front panel.

- Fasten the top hooks (2 locations) of the front panel to the top grooves (2 locations) of the main unit and then close the front panel.

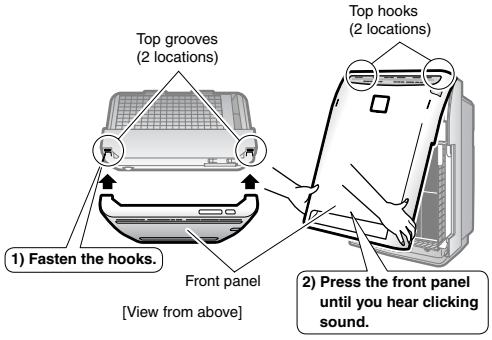


**If the front panel is improperly set, the safety switch may be activated. Operation may not start.** ▶Page 16.

# Preparation before Operation

## ■ Installation of the unit

Installed on a table or the floor

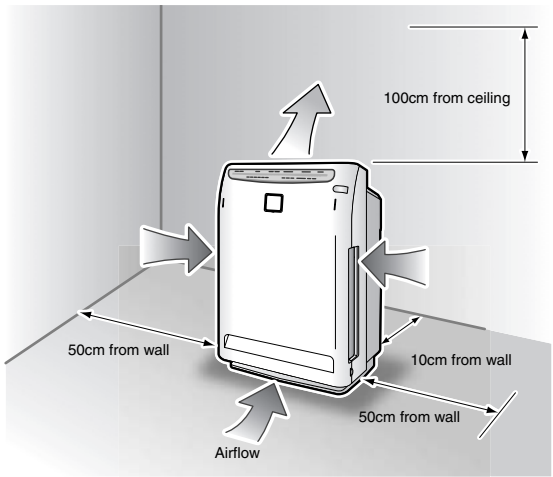


**⚠ CAUTION**

- The wall where the air purifier is set may get dirty depending on the type of wall and environment, even if you follow the specified dimensions of left. In such cases, move the unit a safe distance away from the wall.
- If the air purifier is used for a long time at the same location, the bottom of the unit and floor may become dirty due to the suction air flow from the bottom of the unit. Periodic cleaning is recommended.

**ATTENTION**

- The air is blown slightly to the right, but nothing is wrong with the unit.
- Select a location which allows the air to reach the entire room.
- Place the air purifier on a flat area where it is stable. If the floor is uneven, the unit may vibrate excessively.

**Hints for smart installation**

- To remove house dust, it is effective to install the unit at a lower position in the room. To remove cigarette smoke, it is effective to install the unit in a higher part of the room.
- If you install the air purifier opposite the air conditioner, the circulation effect is enhanced. The unit controls unevenness in the room temperature while cleaning the air during heating or cooling operation.
- Keep TVs, radios and stereos 2m or more away from the unit.
  (The effects of the power circuit inside the unit and cable may cause a distorted TV picture or noise.)
  Keep cordless phones or atomic radio clocks away from this unit also.

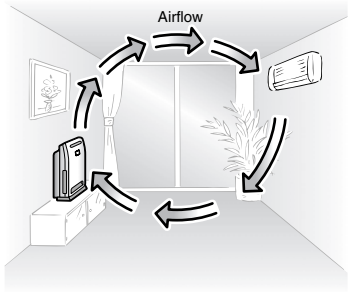


**Do not use the unit in the following places.**

- Do not use the unit in a location exposed to direct sunlight.
  (The response of the main unit to the signal from the remote controller may be weakened and the colour may change.)
- Do not use the unit in locations of high temperature.
  (Heat may discolour and deform the unit.)

11

## ■ Preparation of remote controller

**A battery is already set in the remote controller.**

- The remote controller can be used only after pulling out the clear sheet.

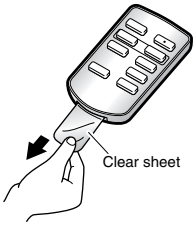


### Battery replacement

**1 Move the tab of the cover on the rear of the remote controller in the direction of the arrow.**

**2 Pull out the cover.**

**3 Replace the battery.**

**4 Close the cover to its original position.**

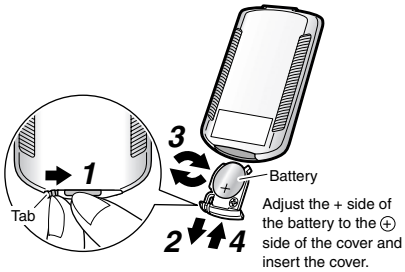


## ■ Insert the power plug into an electrical socket.

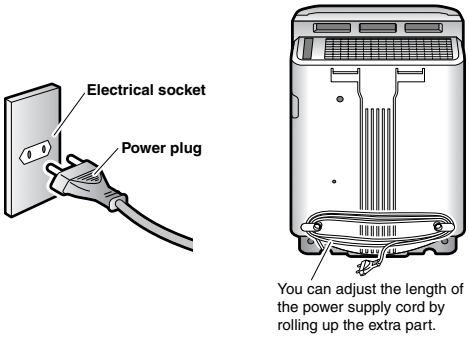


### How to use

- Point the transmitter of the remote controller toward the receiver of the unit.
  If there is an obstruction to the signal, such as a curtain, the unit may not receive the signal.
- The distance from which the remote controller can transmit is about 6m.

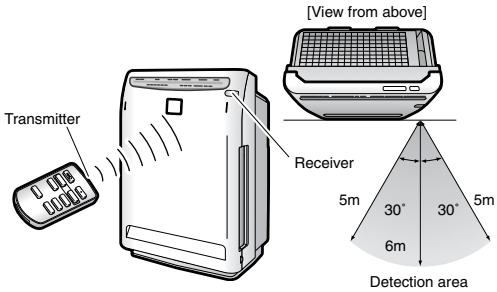


### NOTE

**Battery**

- Store the batteries where babies and children can not reach them.
  If, by chance, a battery is swallowed, make sure to contact a doctor immediately.
- When discarding batteries, cover the terminals of the batteries with tape.
  If mixed with other metal or batteries, heat, explosion or combustion may occur.
- The replacement target is about 1 year but if reception becomes difficult, replace the battery with a new coin type CR2025 (lithium) battery.
- It may be necessary to replace a coin type battery which is approaching its expiration date before the recommended date.
- In order to prevent malfunctions or injuries due to leaking or explosions, make sure to remove the coin type battery when the unit will not be used for a long period of time.
- The coin type battery which comes with the remote controller is for the initial operation. The coin type battery may run down in less than 1 year.

**Remote controller**

- Be careful not to drop or get the remote controller wet. (It causes malfunction.)
- The signals may not be received very well because of electronic lighting style fluorescent lamps (such as inverter fluorescent lamps) in the same room.
- Do not use the remote controller close to the lighting equipment (within 1m).
  (The sensitivity of the main unit to the signal from the remote controller may be weakened and the colour of the unit may change.)

# 4.5 How to Operate

## How to Operate

### To start the operation

**Press** ON / OFF .

(Example of the initial display)

- Operation starts and the airflow rate lamp lights up.
- When you press ON / OFF during operation, operation stops.
- When you press ON / OFF next time, operation starts with the same settings as the previous operation.

### To prevent mishandling by small children

**Childproof lock**

- Press LOCK Push for 2 sec. for about 2 seconds to engage the childproof lock.
- You can release the childproof lock by pressing LOCK Push for 2 sec. again for about 2 seconds.
  You can also release the childproof lock when you disconnect the power plug once, and after 3 seconds or more, reconnect the power plug.

### To operate the unit according to the cleanness level of the air

**Auto fan operation**

**Press** AUTO FAN .

- The auto fan lamp and one of the airflow rate lamps " (Quiet)", " (Low)", " (Standard)", or " (High)" light up.

### To clean the air in the room quickly

**Turbo operation**

**Press** TURBO .

### To set the timer

**Timer operation**

**Press** OFF TIMER .

- Each time the button is pressed, the OFF TIMER is set as follows.

→ "1" (1 hour) → "2" (2 hour) → "4" (4 hour) → (Cancel)

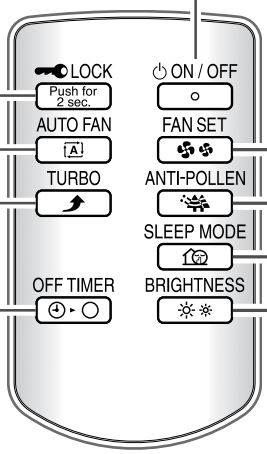


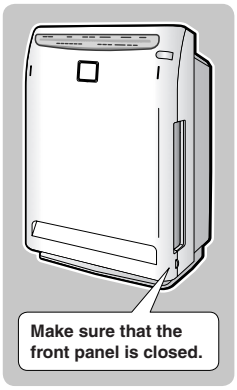


13

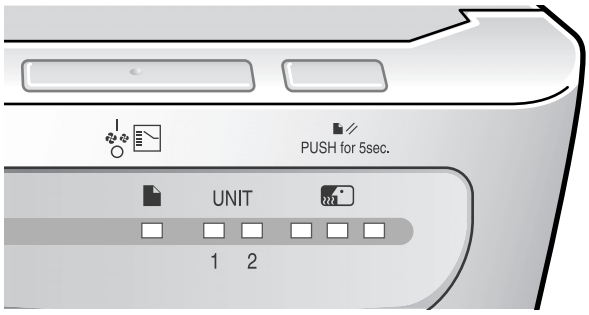


## Operation with the button on the unit

**Press** [ ] .

- The operation mode changes each time the button is pressed.

"Stop" ← "(Sleep mode)" ← "(Anti-pollen)" ← "(Turbo)" ← "(High)" → "(Standard)" → "(Low)" → "(Quiet)" → "(Auto fan)" → "Stop"

## To change the airflow manually

### Airflow manual operation

**Press** FAN SET [ ] .

- Each time the button is pressed, the airflow rate changes as follows.

→ "(Quiet)" → "(Low)" → "(Standard)" → "(High)" →

## To clean pollen

### Anti-pollen operation

**Press** ANTI-POLLEN [ ] .

## To operate quietly when you are sleeping

### Sleep mode operation

**Press** SLEEP MODE [ ] .

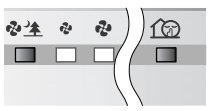

- The sleep mode operation lamp and one of the airflow rate lamps "(Quiet)" or "(Low)" light up.

## To change the brightness of the unit display lamp

**Press** BRIGHTNESS [ ] .

- The brightness of the unit display lamp changes each time the button is pressed.
- It is only the air quality sensor lamp and the odour sensor lamp which completely go off.

< Air quality sensor lamp / Odour sensor lamp >

→ Bright → Dimmed → OFF →

< Other display lamp >

→ Bright → Dimmed → Dimmed →

**NOTE**

- Do not start or stop operation by disconnecting or reconnecting the power plug except in the case of malfunction.
- Do not move the unit during operation.
  It may cause operational issues or malfunction.

**ATTENTION**

- Operation stops for safety when the front panel is opened during operation.

### ■When any malfunction occurs during operation

- If the unit display is abnormally lit or the signal from the remote controller can not be received during operation due to electric lighting or radio interference, disconnect the power plug once. After 3 seconds or more, reconnect the power plug and start operation.

### ■Start / Stop

- The default setting for the airflow rate is "(Auto fan)" airflow. When you disconnect the power plug or remove the front panel, the setting for the airflow rate returns to "Auto fan".
- Before cleaning, make sure to stop operation and disconnect the power plug.

### ■Auto fan operation

- The airflow rate is automatically selected from "(Quiet)", "(Low)", "(Standard)", or "(High)" according to the uncleanness level of the air.
- The purifying capacity improves as the airflow rate increases.

### ■Turbo operation

- A high airflow rate quickly removes any contaminants in the air. This is convenient to use when cleaning the room.

### ■Quiet operation

- A gentle flow of air is discharged. Use this operation especially while sleeping.
  During the quiet operation, the deodorising performance decreases. If the room is not deodorised well, please use the "Standard" or stronger operation mode.

### ■Anti-pollen operation

- The airflow rate switches over between "(Standard)" and "(Low)" every 5 minutes and produces a moderate air stream to catch the pollen before it drops on the floor.

### ■Sleep mode operation

- The airflow rate is automatically selected from "(Quiet)" or "(Low)" according to the cleanliness level of the air.
- This is convenient to use when sleeping.

### ■Timer operation

- The remaining time is indicated by the OFF TIMER lamp.
- The set time can also be changed when the button is pressed while the timer is counting.

### ■Childproof lock

- While the lock is engaged, the operation of the unit and the remote controller are limited to prevent small children from mishandling them.

14

## 4.6 Quick Reference Table of Maintenance

# Quick Reference Table of Maintenance

**WARNING**

Before performing maintenance, stop the unit and disconnect the power plug. (It may cause electric shock or injury.)

**Remove the parts for maintenance in numerical order.**

For details on removing and attaching each part, see ▶Page 17..

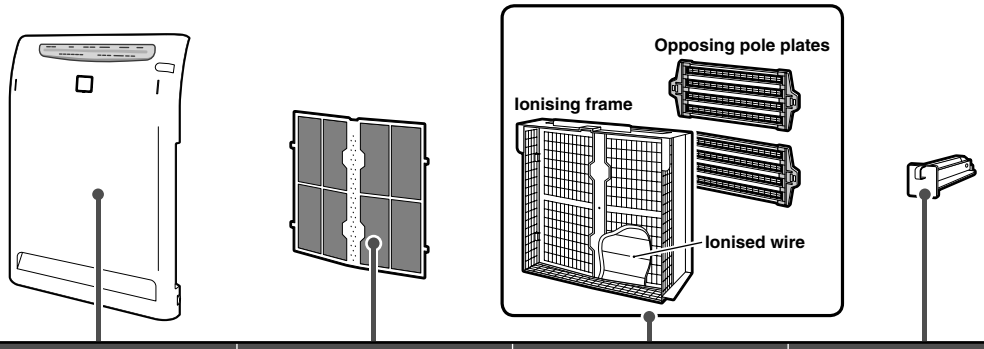


| 1 Front panel | 2 Prefilter | 3 UNIT1 (Plasma ioniser) | 4 UNIT2 (Streamer unit) |
|---|---|---|---|
| 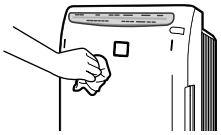 | 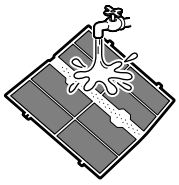 | 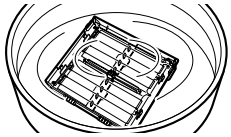 The figure above shows UNIT1 after the opposing pole plates are removed. | 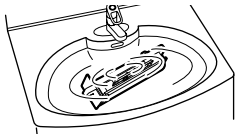 |
| **If it gets dirty** **Wipe** | **Once every 2 weeks** **Vacuum cleaner** **Rinse with water** | **If the "UNIT1" lamp lights** **Soak, drain and dry** **Wipe** | **Once every 3 months or if the "UNIT2" lamp lights** **Soak, drain and dry** **Wipe** |
| • Wipe off the dirt with a cloth slightly moistened with water.<br>• In the case of heavy dirt, wipe it off with a cloth moistened with neutral detergent.<br>• Do not use hard brushes, etc. | • Use a vacuum cleaner to remove the dust from the prefilter, and wash it with water.<br>• In the case of heavy dirt, wash the prefilter with a soft brush or neutral detergent and dry it well in the shade.<br>Dry the prefilter completely before using it because the "UNIT1" lamp may light up if any water drops remain on the prefilter. | • Use a vacuum cleaner to remove the dust.<br>• Soak in lukewarm water or water. (About 1 hour)<br>• Dry throughly after soaking.<br>Care and Cleaning ▶Page 19, 20. | |

**WARNING**

- Do not use gasoline, benzene, thinner, scouring powder, kerosene, alcohol, etc.
  (Cracking, electric shock or fire may occur.)
- Do not wash the main unit with water.
  (Electric shock, fire or malfunction may occur.)

**NOTE**

- When detergent is used, wipe the detergent off the surface to prevent any residue.
- Do not dry the prefilter in a place exposed to direct sunlight.
- Do not use hot water with a temperature of 50˚C or higher for cleaning the parts.
- Do not dry the parts over a fire.
  It may cause discolouration or deformation of the parts and the parts may become unusable.

15

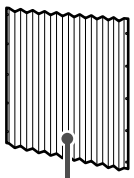

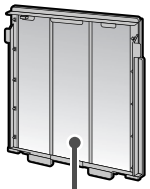

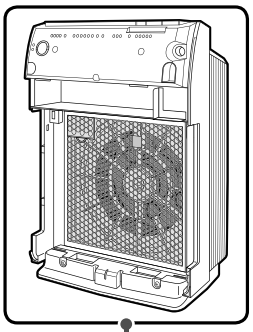

| 5 Pleated filter | 6 Deodorising catalyst unit | 7 Main unit or air inlet for sensor |
|---|---|---|
| 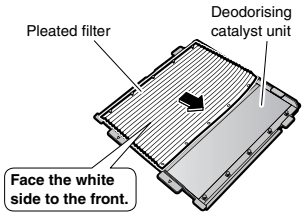 | 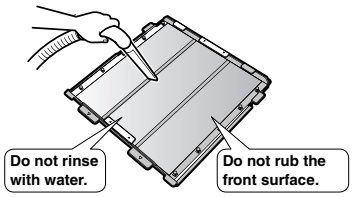 | 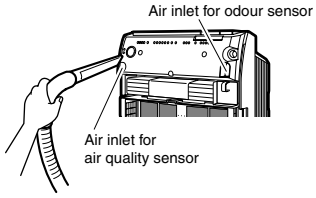 |
| **If the filter lamp lights up or blinks**<br>**Replace** | **If it gets dirty**<br>**Vacuum cleaner**<br>**Can not be rinsed in water** | **If it is clogged**<br>**Vacuum cleaner**<br>**Wipe** |
| Replacement ▶Page 21. | • Use a vacuum cleaner to remove the dust.<br>• If the deodorising catalyst unit frame becomes dirty, wipe off the dirt with a cloth slightly moistened with water. In the case of heavy dirt, wipe it off with a cloth moistened with neutral detergent.<br>• Do not wash with water. (If the unit is washed with water, it will be deformed and become unusable.) | • If the main unit or the air inlet for the air quality / odour sensor is clogged with dust, use a vacuum cleaner to remove the dust.<br>• For the main unit, wipe off the dirt with a cloth slightly moistened with water. |

**NOTE**

- Be careful not to scratch the surface of the front panel or damage the projections on the rear of it after it is removed.
  **The projections on the rear work as a safety switch that shuts power off when the front panel is opened.**
  If they are damaged, operation can not start.

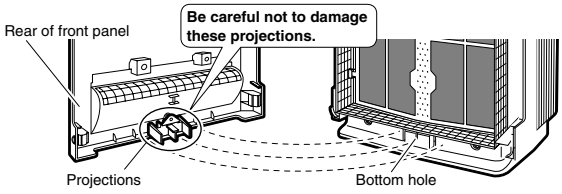


**⚠ WARNING**

- Do not touch the inside of the hole at the bottom of the unit. (Electric shock may occur.)
- Consult your dealer if the unit is damaged and does not operate.

16

# 4.7 Removing and Attaching Each Part

## Removing and Attaching Each Part

### Remove

**1** **Remove the front panel.**

- Push the 2 clips (right and left), and pull the front panel upward and remove it.

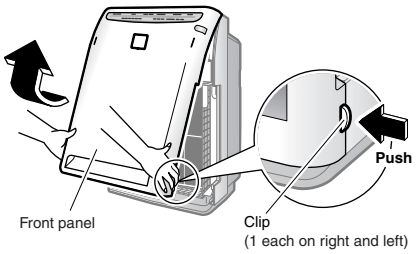


**2** **Remove the prefilter.**

- Hold the indent and pull the prefilter. Then, unhook the tabs (4 locations) of the prefilter from the holes (2 each on the right and left) of UNIT1.

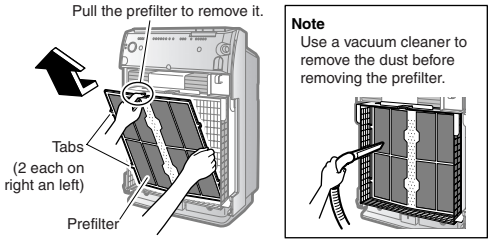


**3** **Remove UNIT1.**

- Holding UNIT1 by the handles, pull UNIT1 upward and remove it.

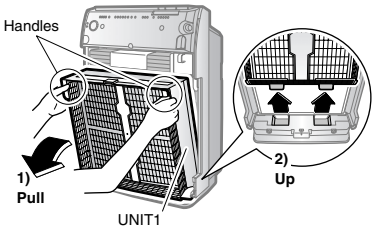


**4** **Remove the deodorising catalyst unit.**

- Holding the deodorising catalyst unit by the handles, pull the deodorising catalyst unit upward and remove it.

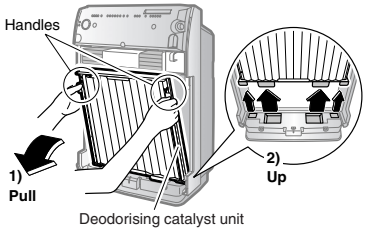


### Attach

**1** **Attach the deodorising catalyst unit.**

- Holding the deodorising catalyst unit by the handles, fit the projections into the grooves (4 locations) at the bottom of the main unit and, press the deodorising catalyst unit into the main unit.

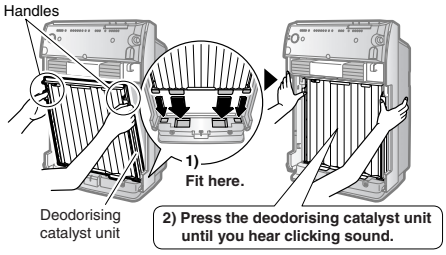


**2** **Attach UNIT1.**

- Holding UNIT1 by the handles, fit the projections into the grooves (2 locations) at the bottom of the main unit, and press UNIT1 into the main unit.

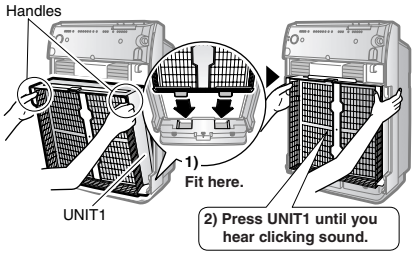


**3** **Attach the prefilter.**

- Fit the tabs (4 locations) of the prefilter into the holes (2 each on the right and left) of UNIT1.

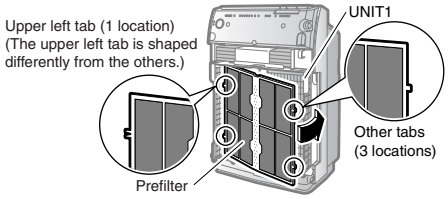


**4** **Attach the front panel.**

- Fasten the top hooks (2 locations) of the front panel to the top grooves (2 locations) of the main unit and then close the front panel.

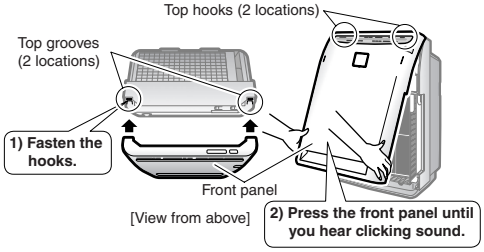


**If the front panel is improperly set, the safety switch may be activated. Operation may not start.** ▶ Page 16.

17

## ■ Removing and attaching the opposing pole plates

**CAUTION**

**Wear rubber gloves to remove and attach the opposing pole plates.** Hands can be cut on the opposing pole plates and ionised wires.

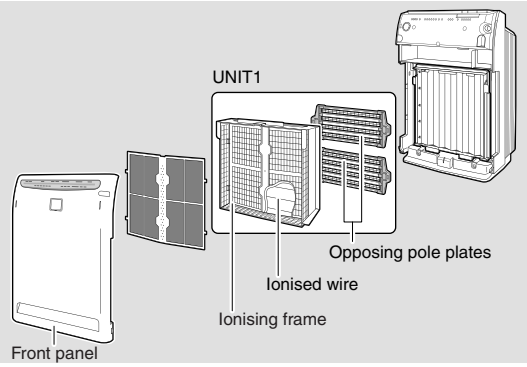


### Remove

**1 Remove the front panel and UNIT1.**

▶Page 17.

**2 Remove the opposing pole plates from the rear of UNIT1.**

- Pinching together the white and green knobs (2 sets on the right and left), lift the opposing pole plate up and remove it.

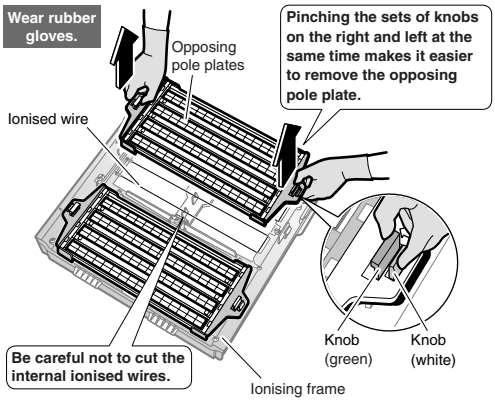


### Attach

**1 Attach the opposing pole plates.**

1) Fit the opposing pole plate over the knobs (2 sets on the right and left) on the ionising frame.

The opposing pole plates have no difference between the upper and the lower, or between the right and the left. Attach them so that the arrow is visible.

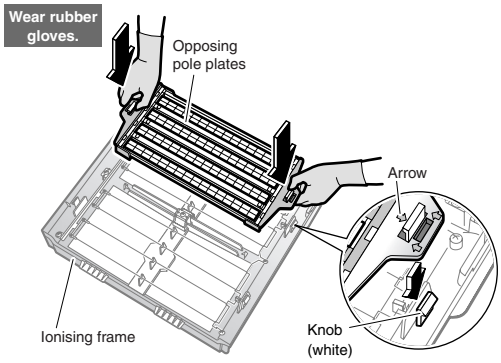


2) Insert securely until it clicks.

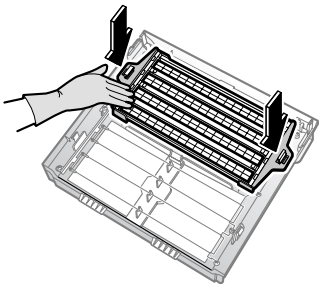

3) Attach the other opposing pole plate.

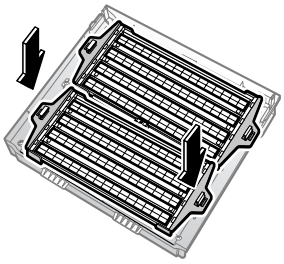

**2 Attach UNIT1 and the front panel.**

▶Page 17.

# 4.8 Cleaning of UNIT1 and UNIT2

## Cleaning of UNIT1 and UNIT2

| | |
|---|---|
| **Time for cleaning** | **UNIT1:**<br>**If the "UNIT1" lamp lights**<br>**UNIT2:**<br>**Once every 3 months or if the "UNIT2" lamp lights** |
| **Cleaning method** | **Soak, drain and dry** **Wipe** |

If marking is a concern, clean the unit even if the "UNIT1" and "UNIT2" lamps do not light.

For details on removing and attaching each part, see ▶Page 17. .

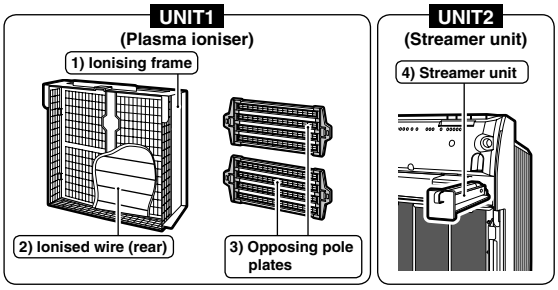


| Procedure | UNIT1 | | |
|---|---|---|---|
| | 1) Ionising frame | 2) Ionised wire | 3) Opposing pole plates |
| Remove the parts. | ▶Page 17, 18. | | ▶Page 18. |
| Use a vacuum cleaner to remove the dust. ▼ | | | 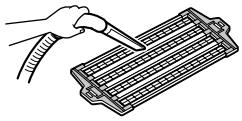 |
| Soak in lukewarm water or water. (About 1 hour) ▼ | 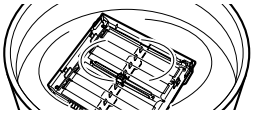 | | 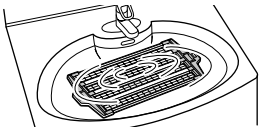 |
| Remove dirt with a piece of cloth, soft brush, etc. **Wear rubber gloves.** ▼ | 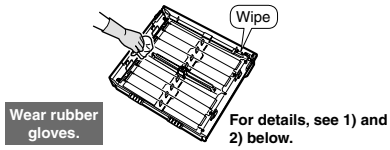  **For details, see 1) and 2) below.** | | |
| Rinse in running water and drain. ▼ | 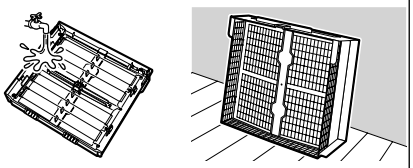 | | 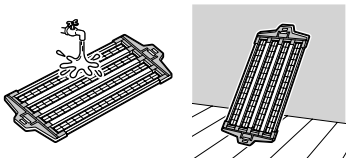 |
| Dry in a well-ventilated, shaded place. (About 1 day) ▼ | | | |
| Attach the parts. | ▶Page 17, 18. | | ▶Page 18. |

### 1) Ionising frame (Remove dirt after soaking but before drying.)

- Remove dirt from plastic parts with a soft piece of cloth.
- Use a cotton swab, etc. to wipe away dirt in recesses and places where fingers do not fit.
- Do not leave any lint from cleaning cloths behind. Lint may lead to malfunctions.

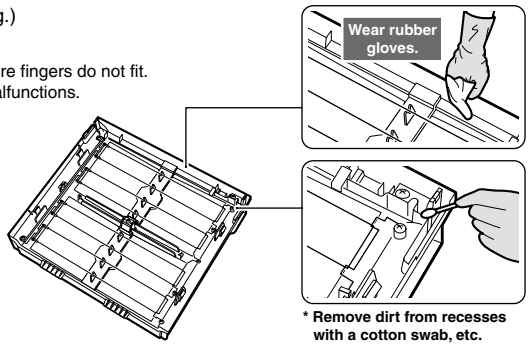


*** Remove dirt from recesses with a cotton swab, etc.**

**19**

**CAUTION**

- **Wear rubber gloves when wiping or rubbing the units.**
  - Hands can be cut on the opposing pole plates and ionised wires.
- There are ionised wires on the rear of the opposing pole plates. Be careful not to snap these wires when removing and attaching the units.
  - If the unit is operated with broken ionised wires, the “UNIT1” lamp lights. While the lamp is lit, dust collecting capacity is low.
  - If any ionised wire is accidentally cut, it is necessary to replace the ionised wire with a new one. Consult your dealer. (Do not replace the ionised wire by yourself.)

**ATTENTION**

- Operation can be performed safely without the streamer unit installed on the main unit, but this degrades the deodorising performance. Use the main unit after the streamer unit is installed.

| UNIT2 | Notes |
|---|---|
| 4) Streamer unit | |
| Open the front panel and pull out the streamer unit. | |
| | • Do not remove the screws from the ionising frame or UNIT2. This may lead to damage. |
| 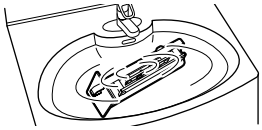 | • Clean UNIT1 and UNIT2 somewhere which can be wet such as in a shower room or kitchen sink.<br>• For stubborn dirt, soak UNIT1 and UNIT2 in lukewarm water or water in which neutral liquid detergent (i.e., kitchen cleaner, etc.) has been dissolved.<br>• Use the amount of neutral liquid detergent indicated in the instructions for the detergent.<br>• Do not use powdered, alkaline or acidic cleaner, and do not rub with hard brushes, etc. It may lead to deformation and damage.<br>• If the needles inside UNIT2 are deformed, deodorising capacity diminishes. |
| 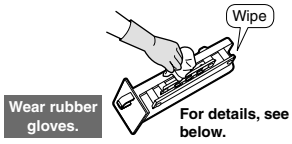  | |
| 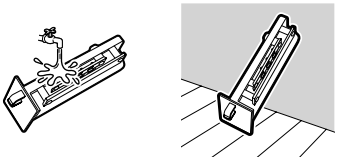 | • If detergent remains on UNIT1 or UNIT2, the “UNIT1” and “UNIT2” lamps do not go off after cleaning, therefore rinse off the detergent well.<br>• Do not leave any lint from cleaning cloths behind. Lint may lead to malfunctions.<br>• Plastic parts may deform or discolour if exposed to direct sunlight.<br>• If water remains on UNIT1 or UNIT2, even in small quantities, the “UNIT1” and “UNIT2” lamps do not go off after cleaning, therefore dry them throughly in the shade. |
| Reattach the streamer unit as before. | |

## 2) Ionised wire (8 locations)

- Remove dirt from the ionised wires and surrounding plastic parts with a soft piece of cloth.

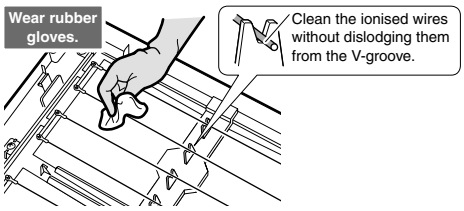


*** Wipe the ionised wires gently. Pulling on them forcefully may cause them to snap.**

## 4) Streamer unit

- Wipe the needles with a cotton swab or a soft piece of cloth if they are dirty.
- Remove dirt from plastic parts (■) in internal areas with a cotton swab or a soft piece of cloth.
- Do not remove the screws.

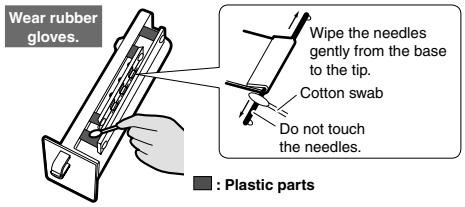


*** If the needles are deformed, deodorising capacity diminishes.**

# 4.9 Replacement of the Pleated Filter

## Replacement of the Pleated Filter

| | |
|---|---|
| **Time for cleaning** | **When the filter lamp in the display lights up or blinks** (UNIT 1 2)<br>It is not necessary to replace the pleated filter until the filter lamp lights up or blinks. |
| **Cleaning method** | **Replace** |

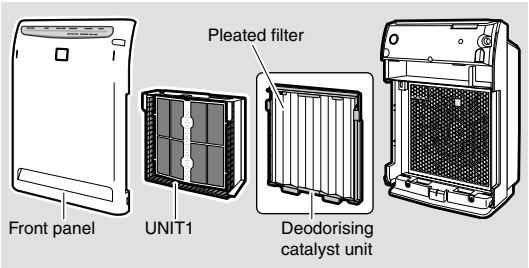


**1 Remove the front panel and UNIT1.**

▶Page 17.

**2 Replace the pleated filter with a new filter.**

1) Remove the used pleated filter.
   - Release the pleated filter from the projections (5 each on the right and left) of the deodorising catalyst unit (front side).

2) Take out a new pleated filter from the filter container and then attach it to the deodorising catalyst unit.
   - Fit the holes (5 each on the right and left) of the pleated filter onto the tabs on the right and left of the deodorising catalyst unit.
   - Insert the pleated filter underneath the tabs (4 locations at the top and bottom) of the deodorising catalyst unit.

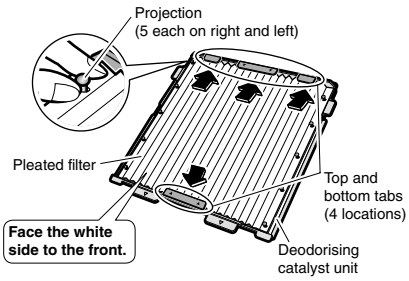


**3 Attach UNIT1 and the front panel.**

▶Page 17.

**4 Connect the power plug.**

**5 Press the filter reset button on the upper part of the front panel for 5 seconds.**

(The filter lamp goes off with a short beep sound.)

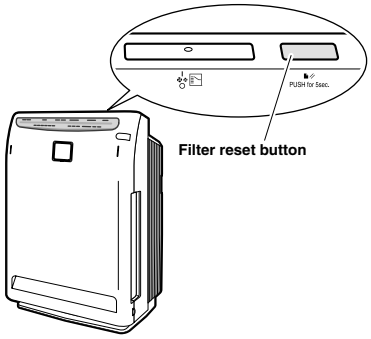


- Even if the pleated filter is replaced, the filter lamp does not go off unless you press the filter reset button for 5 seconds.

**NOTE**

- Order the pleated filter for replacement from your dealer.
- Replace the pleated filter when the filter lamp lights up or blinks even if the filter looks clean. The amount of visible dirt does not represent the capacity of the filter.
- The replacement interval for the pleated filter varies according to how the unit is used and where it is located.
  The filter lamp lights up after about 2 years if the unit is used every day in a house where 10 cigarettes per day are smoked.
  (The replacement interval shortens when the unit is used where the air is particularly dirty.)
- When you have replaced the pleated filter before the filter lamp lights up because of visible dirt or generation of odour, press the filter reset button for 5 seconds.

**Options**

**ATTENTION**

- For replacement pleated filters contact the service shop.

| Part | Model |
|---|---|
| Pleated filter (7) | KAC017A4E |

- If the unit is used with dirty parts
  - Air is not cleaned.
  - Odors are not removed.
  - Unnecessary odors may be generated.
- Discard of the pleated filters as noncombustible waste.

### ■Disposal requirements

Your product and the batteries supplied with the controller are marked with this symbol. This symbol means that electrical and electronic products and batteries shall not be mixed with unsorted household waste.
For batteries, a chemical symbol can be printed beneath the symbol. This chemical symbol means that the battery contains a heavy metal above a certain concentration.
Possible chemical symbols are:
Pb: lead (>0.004%)
Hg: mercury (>0.0005%)

Disposal of this product must be done in accordance with relevant local and national legislation.
Units and waste batteries must be treated at a specialized treatment facility for re-use, recycling and recovery.
By ensuring correct disposal, you will help to prevent potential negative consequences for the environment and human health.
Please contact the installer or local authority for more information.

# 4.10 Sensitivity Setting of the Air Quality Sensor (Dust Sensor)

## Sensitivity Setting of the Air Quality Sensor (dust sensor)

**The sensitivity of the air quality sensor can be changed.**

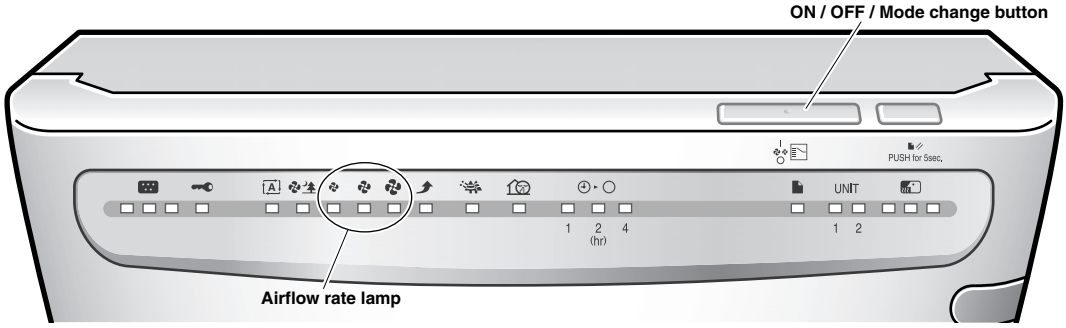


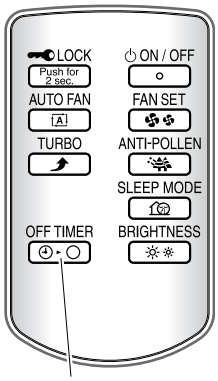


OFF TIMER button

**1 Press on the unit for 10 seconds.**

**2 With pressed, point the remote controller at the unit and press OFF TIMER .**

- The receiving tone sounds, one of the airflow rate lamps " (Low)", " (Standard)" or " (High)" blinks for 5 seconds, and then the lamp corresponding to the set sensitivity lights up.

**3 Change the sensitivity using on the unit.**

- Each time the button is pressed, an airflow rate lamp lights up and the sensitivity change as below.
- The sensitivity setting is indicated by the airflow rate lamps.
  If the airflow rate lamps do not change, disconnect the power plug, wait at least 3 seconds, reconnect the power plug and try the operation again from the beginning.

To **raise** the sensitivity:
→ Select the " (Low)" airflow rate lamp.

To **lower** the sensitivity:
→ Select the " (High)" airflow rate lamp.

| Airflow rate lamp | Sensitivity | |
|---|---|---|
| "Low" | **High** | The sensor more readily reacts to dust. |
| "Standard" | **Normal** | Default setting |
| "High" | **Low** | The sensor reacts less to dust. |

**4 When you decide on the setting, point the remote controller at the unit and press OFF TIMER .**

- The receiving tone sounds and the lamp corresponding to the set sensitivity blinks.

**5 Remove the power plug while the set lamp is blinking, wait for 3 seconds or more, and then insert the power plug again.**

**NOTE**

- The sensitivity of the air quality sensor can be set whether the unit is running or stopped.
- If step *5* is not performed, the unit does not go back to the normal operating mode.
  If step *5* is performed in the middle of setting, the setting can not appropriately be completed.

# 5. Childproof Lock Function: Special Mode

**Outline**

In normal mode, once you disconnect the power plug, the childproof lock function is cancelled. The special mode enables the childproof lock function to resume even after the power plug is disconnected.
It is useful when you keep the remote controller away from the small children or the guests in hotel rooms to prevent them from mishandling.

**Detail**

The air purifier is operating with the childproof lock function on.
↓
Disconnect the power plug to stop operation.

Insert the power plug.
↓
Start operation.
↓
Normal operation
The childproof lock function is cancelled.
To set the function effective, press the childproof lock button on the remote controller for 2 seconds again. ★2

**Special mode**
Pressing the [ON / OFF / Mode change] button on the main unit, insert the power plug. ★1
↓
Operation starts in special mode
The childproof lock function resumes.

(R13827)

**Note:** ★1

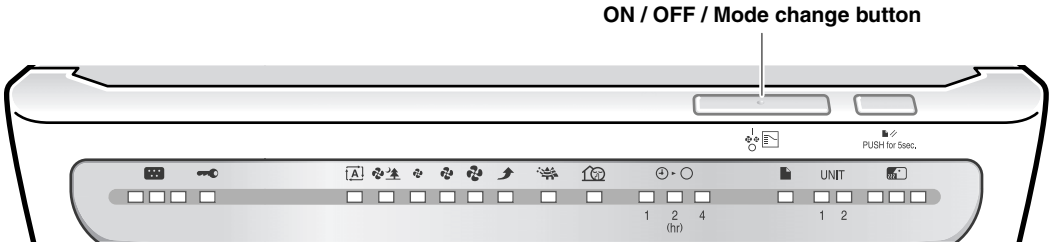


(R14650)

★2

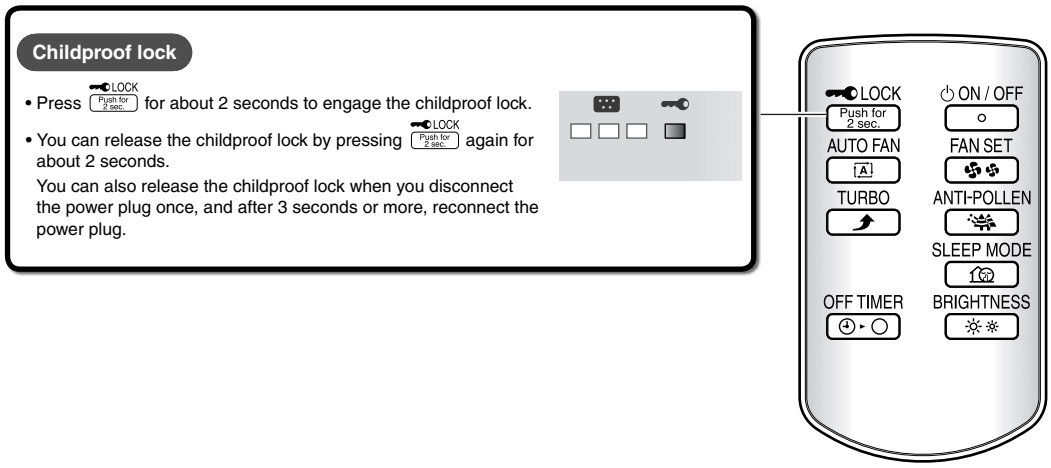


(R14651)

# 6. Optional Accessories

## 6.1 Pleated Filter (Titanium Apatite Photocatalytic Filter) - KAC017A4E

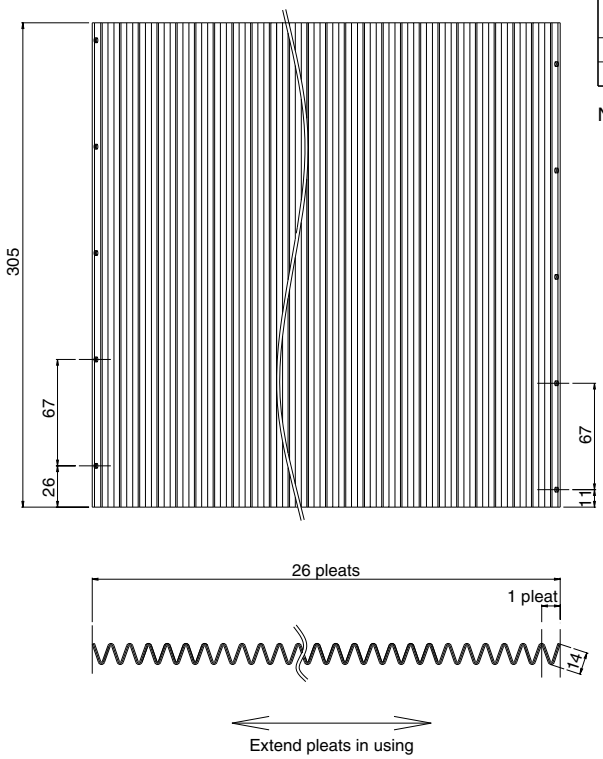


| Specifications | |
|---|---|
| Item \ Model | KAC017A4E |
| Material | Non-woven fabric (electrostatic) |
| No. of packages | 5 |

Notes: 1. Replacement guideline: Every 2 years (for about 10 years in total)
2. Appearance color: White (front), blue (back)

# 7. Troubleshooting

## 7.1 Frequently Asked Question

# Frequently Asked Questions

**Before consulting your dealer, check the following points.**

**Question : Can the deodorising catalyst unit be washed with water? Does the unit need to be replaced?**

**Answer :** No, the deodorising catalyst unit can not be washed with water. (If the unit is washed with water, it will be deformed and become unusable.)
When you have washed the deodorising catalyst unit by mistake, consult your dealer.
Remove the unit from the main body, and use a vacuum cleaner to remove the dust. It is not necessary to replace the deodorising catalyst unit with a new one.
If odour is a concern, lightly wet the surface of the deodorising catalyst unit using an atomiser, and then dry it in a shaded and well-ventilated place (about 1 day).

**Question : The sensitivity of the air quality sensor seems low.**

**Answer :** This is because the reaction time of the air quality sensor differs depending on the size of the room.
If the unit is installed at a lower position in the room, reaction to the smoke of cigarettes or other items may be bad.
Change the installation site of the unit or adjust the sensitivity of the air quality sensor.

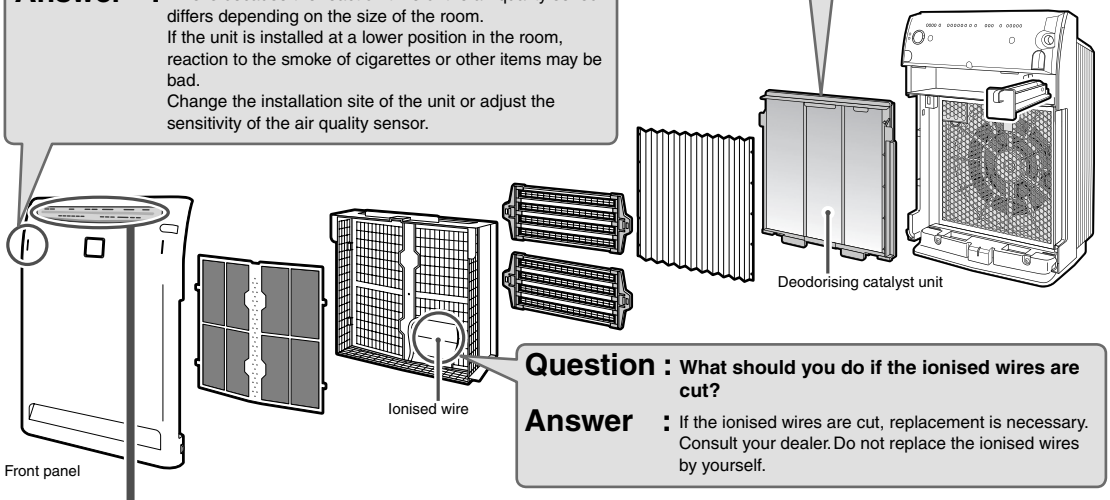


**Question : What should you do if the ionised wires are cut?**

**Answer :** If the ionised wires are cut, replacement is necessary. Consult your dealer. Do not replace the ionised wires by yourself.

### ■ "If these lamps light or blink"

**The air quality sensor lamp remains red or yellow.**

This is due to the dust built up in the air quality sensor.
Use a vacuum cleaner to remove the dust from the air inlet for the air quality sensor.

**UNIT lamp lights up.**

**UNIT1: The plasma ioniser is dirty.**
**UNIT2: The streamer unit is dirty.**
**Soak and wash.**

The electric dust collection and deodorising functions remarkably deteriorate because electricity supply to the ionised wires and streamer discharger stops for safety.
Use the unit after cleaning the inside and the "UNIT1" "UNIT2" lamps go off. (There are no safety issues even if the lamps are lit.)

**The airflow rate lamps blink simultaneously.**

Disconnect the power plug and remove the obstacle. Reconnect the power plug cord and turn the power on.

**The filter lamp lights up or blinks.**

Replace the pleated filter with a new one and press the filter reset button for 5 seconds.

## 7.2 Check before Requesting Servicing

# Troubleshooting

**Before consulting your dealer or asking for repairs, check the following points.**
**If the problems still can not be solved, consult your dealer.**

| The unit does not operate. | |
|---|---|
| **The unit does not operate even if the ON / OFF button is pressed.** | • **Is the front panel correctly set?**<br>• **Are the projections on the rear of the front panel broken?**<br>➔ Check the projections.<br>Consult your dealer if the projections are broken.<br>• **Is the battery of the remote controller run down?** |

| The desired results are not obtained. | |
|---|---|
| **The air is not cleaned.** | • **Is the unit located where the air does not reach the entire room or is something obstructing the airflow?**<br>➔ Select an unobstructed location from where the air can reach the entire room.<br>• **Is the prefilter, the pleated filter or UNIT1 dirty?**<br>➔ Perform cleaning.<br>If odour of the deodorising catalyst unit is a concern, lightly wet the surface of the unit using an atomiser, and then dry it in a shaded and well-ventilated place. |
| **Although there is odour, the green lamp remains lit.** | • **Is a large amount of odour generated when starting operation of the unit?**<br>➔ The odour level of the initial 1 minute is used as the standard for the sensitivity of the odour sensor. Operate the unit with an increased airflow.<br>Modify the standard sensitivity of the odour sensor using the following procedure.<br>When the air is clean (when there is no odour), disconnect the power plug and wait for 3 or more seconds. Connect the power plug once again, and start operation. |
| **Odour comes from the air outlet.** | • **Is a large amount of odour generated temporarily? (i.e., many people are smoking, grilling meat, etc.)**<br>➔ Operate the unit and the odour should gradually go away.<br>• **Have you moved the unit from another room?**<br>➔ The original room may have an odour.<br>Operate the unit for a while.<br>• **Are odours constantly generated in the room? (i.e., paint, new furniture, wall paper, sprays, cosmetics, chemicals, etc.)**<br>➔ As odour that is constantly generated can not be completely removed, use the ventilation system in the room or operate the unit in a well-ventilated room for a while.<br>• You may smell an odour as ozone particles are generated.<br>The amount is negligible, so it does not harm your health. |

# Troubleshooting

**Before consulting your dealer or asking for repairs, check the following points.**
**If the problems still can not be solved, consult your dealer.**

| A sound is heard. | |
|---|---|
| **A crackling or buzzing sound is heard during operation.** | • **Are UNIT1 and UNIT2 correctly set?**<br>➔ Insert UNIT1 until it clicks.<br>Insert UNIT2 completely to the end.<br>• **Is dust adhered to UNIT1 and UNIT2?** |
| **A fizzing sound is heard during operation.** | • UNIT2 makes a hissing sound caused by the streamer discharge during operation.<br>Depending on the usage conditions, the sound becomes lower or the sound quality may change, but this does not indicate any problem with operation.<br>If the sound persists, change the installation site of the unit. |

| The lamp lights up or blinks. | |
|---|---|
| ■ **The airflow rate lamps blink simultaneously.**<br>■ **The unit does not blow air.** | • **Is there any obstacle in the air outlet?**<br>➔ Disconnect the power plug and remove the obstacle. Reconnect the power plug and turn the power on.<br>If the present condition does not change or you can not remove the obstacle, consult your dealer. |
| **The "UNIT1" lamp or "UNIT2" lamp does not go off or light up again even after cleaning UNIT1 or UNIT2.** | • **Are UNIT1 and UNIT2 set correctly?**<br>➔ Insert UNIT1 until it clicks.<br>Insert UNIT2 completely to the end.<br>• **Are water drops, detergent, or bits of fibre left in UNIT1 and UNIT2 after cleaning?**<br>➔ After cleaning, wash UNIT1 and UNIT2 well so as not to leave detergent or bits of fibre, and completely dry them.<br>• **Are the ionised wires cut?**<br>➔ Check the ionised wires. Consult your dealer for replacement with new ones. |
| **The filter lamp does not go off, although the pleated filter is replaced.** | • **Did you press the filter reset button for 5 seconds?**<br>➔ Even if the pleated filter is replaced, unless you press the filter reset button for 5 seconds, the filter lamp does not go off. |

| Other | |
|---|---|
| **There is a burn mark on the metal part of UNIT2.** | • This is a mark made by the streamer discharge and is not abnormal. |
| **The TV picture is distorted.** | • **Is a TV or radio installed within 2m of the unit or is an indoor antenna used close to the unit?**<br>• **Is the power supply cord or the antenna of the TV or radio close to the unit?**<br>➔ Move the unit as far away from TVs, radios and antennas as possible. |

# 7.3 Diagnosis

**Caution** Be sure to turn off the power switch before connecting or disconnecting connectors, or parts may be damaged.

| Problem | Supposed Causes | Diagnosis |
|---|---|---|
| The air purifier does not operate or none of the indication lamps lights. | ■ The power is not turned on.<br>■ Unspecified voltage is applied.<br>■ The front panel is broken. (The front panel switch is broken.)<br>■ The power supply PCB is defective.<br>■ The control / display PCB is defective. (The front panel switch is defective.) | <Check point><br>1. Is the rated voltage within ±10%?<br>2. Does the projection on the front panel press the safety switch properly? |
| The remote controller sends signals erratically. (You can operate with the ON/OFF button on the main unit, but cannot with the remote controller.) | ■ The battery of the remote controller is exhausted.<br>■ The remote controller is defective.<br>■ The control / display PCB is defective.<br>■ Malfunction is caused by inverter fluorescent lamps. | <Check point><br>1. Is the battery correct? (2.5 V or more?)<br>2. Is infrared signal sent from the remote controller? (Check with an infrared checker.) |
| The odor sensor lamp or the dust sensor lamp keeps lighting red. | ■ Wrong sensing<br>(The red lamp stays on while the odor sensor or dust sensor is sensing moisture or dust in the air. This is not a failure.)<br>■ The control / display PCB is defective.<br>■ The dust sensor is defective. | (Odor sensor lamp)<br><Check point><br>1. When the humidity is higher than 80%RH, the odor sensor detects moisture in the air. (This is not a failure.)<br>• Locate the unit in another place.<br>• Reset the power supply.<br>2. When the room is too large or open, the odor sensor is always activated due to insufficient capacity. (This is not a failure.)<br><br>(Dust sensor lamp)<br><Check point><br>1. Clean the air inlet and the peripheral area of the dust sensor and locate the unit in another place. If the display of dust sensor lamp changes, the dust sensor detects dust in the air. (This is not a failure.) |
| All the 4 airflow rate lamps blink simultaneously. The fan motor is not revved up. (The DC fan locks.) | ■ Foreign objects in the fan<br>■ The connector is disconnected.<br>■ The fan motor is defective.<br>■ The power supply PCB is defective.<br>■ The control / display PCB is defective. | <Check point><br>1. Make sure that the fan motor connector is connected. |
| The lamp automatically changes. | ■ The unit may be in the demo mode.<br>■ The filter reset button is blocked. | The demo mode is activated when you keep holding down the filter reset button and turn on the power.<br><br><Check point><br>1. Pull out the power plug or turn the power off to cancel the demo mode. |

# 8. Wiring Check after Replacing PCBs

Check the following points after replacing the PCBs.

■ **Wiring check mode using the remote controller**

(1) Insert the power plug.

(2) Press the [OFF TIMER] button within 2 seconds.

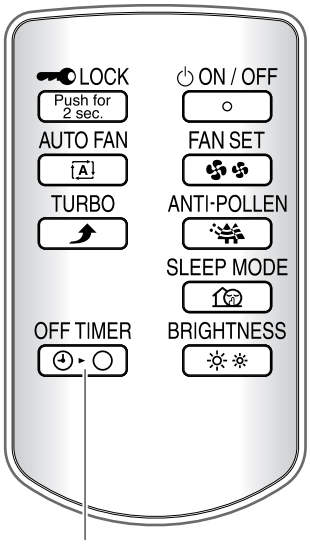


(R14652)

(3) If the connection is correct, all the lamps light up after about 5 seconds.

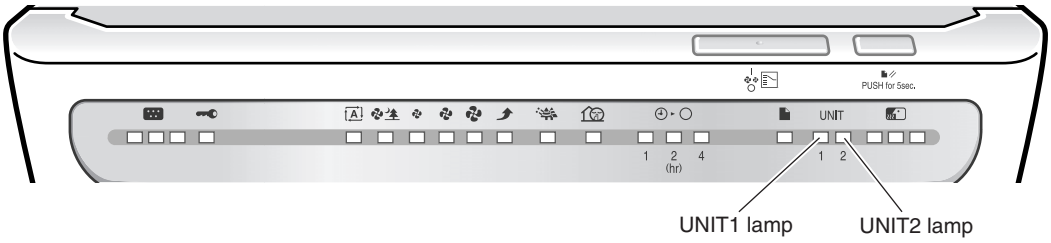


(R14653)

If there is any wrong connection, correct it.

- When the UNIT1 lamp lights up, the wiring to the plasma ionizer is incorrect.
- When the UNIT2 lamp lights up, the wiring to the streamer unit is incorrect.
- When the UNIT1 and UNIT2 lamps light up at the same time, the wirings to the plasma ionizer and the streamer unit are incorrect.

(4) Insert the power plug again, then the normal operation starts.

# 9. Removal Procedure

## 9.1 Removal of Front Panel / Filters

**Procedure**

**Warning** **Be sure to wait for 10 minutes or more after turning off all power supplies before disassembling work.**

| Step | Procedure | Points |
|---|---|---|
| 1. Appearance | 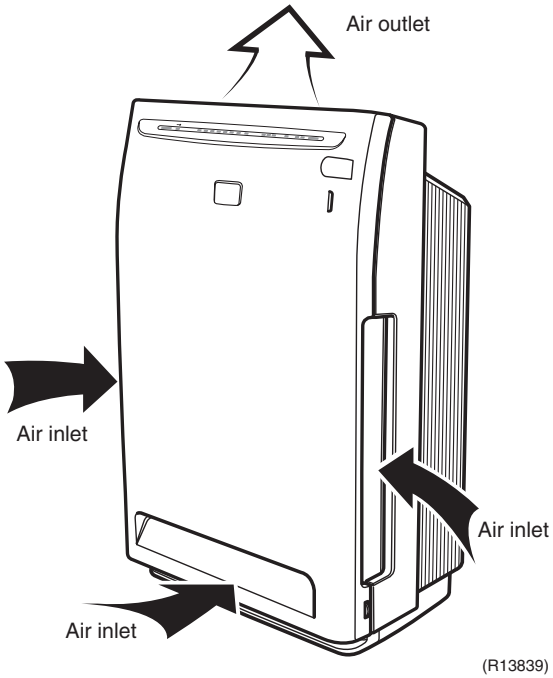 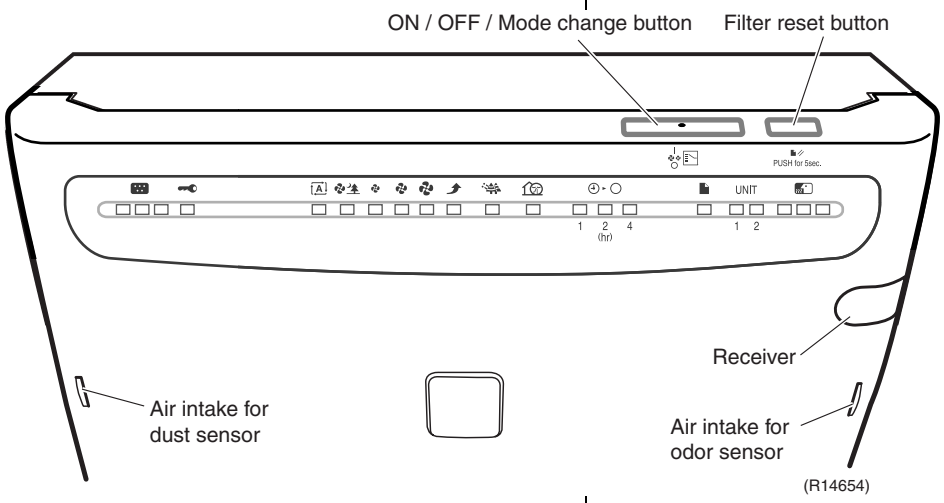 | |
| 2. Remove the front panel.<br>1 Pressing the projections (right and left), hold the lower section of the front panel and pull it. | 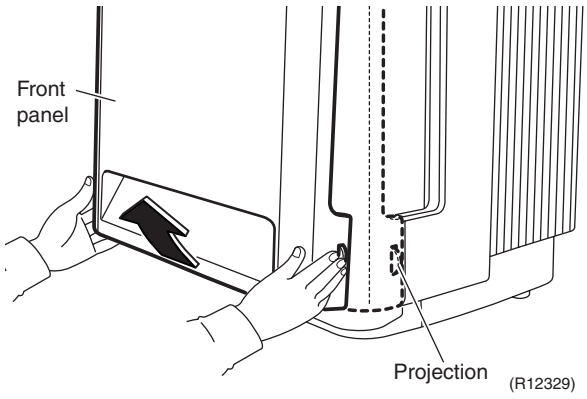 | |

| Step | Procedure | | Points |
|---|---|---|---|
| 2 | Lift the front panel to unfasten the upper hooks, then detach the front panel. | 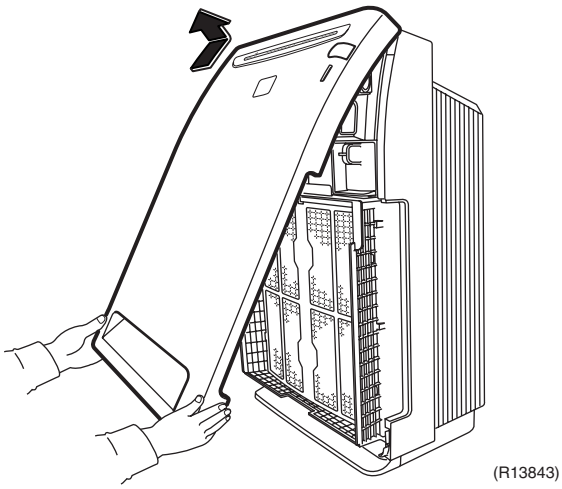 (R13843) | ■ When reassembling, insert the 2 upper hooks of the front panel into the grooves on the air purifier and close the front panel. |
| | | 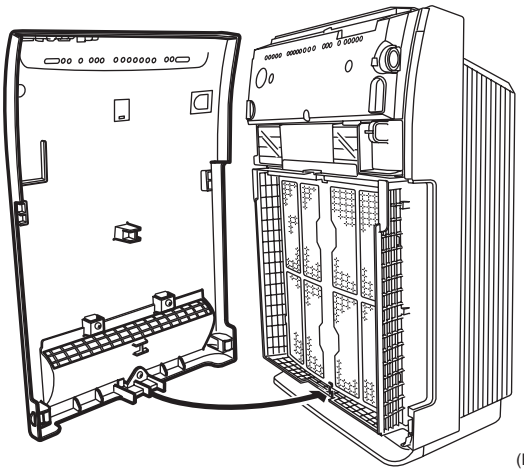 (R12331) | ■ The projection at the rear side of the front panel activates safety switch. Be careful not to deform the projection. |
| | | 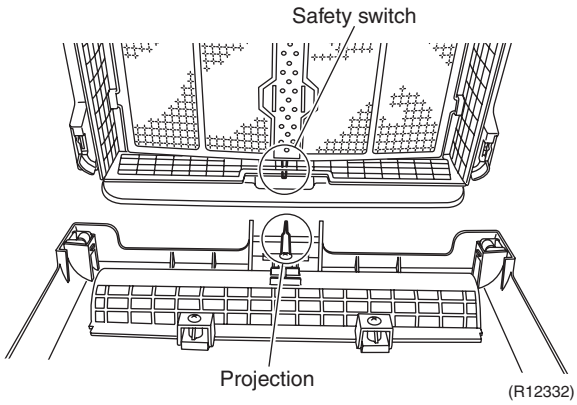  (R12332) | |
| 3 | “Maintenance Chart” is on the unit. | 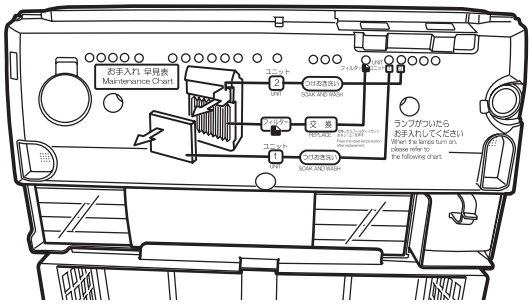  (R12333) | |

| Step | | Procedure | Points |
|---|---|---|---|
| 3. Remove the pre-filter. | | | ■ When reassembling, fit the pre-filter as the “FRONT” mark comes front. |
| 1 | Pull the recessed part of the pre-filter upper section and unfasten the right and left hooks (4 in total). | 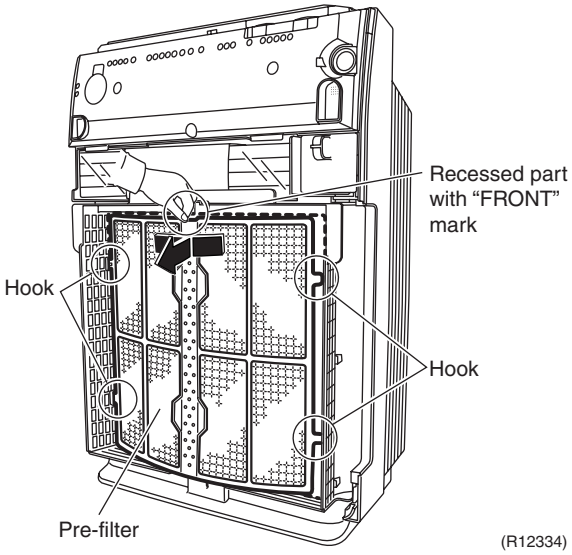 | |
| 2 | Remove the pre-filter. | 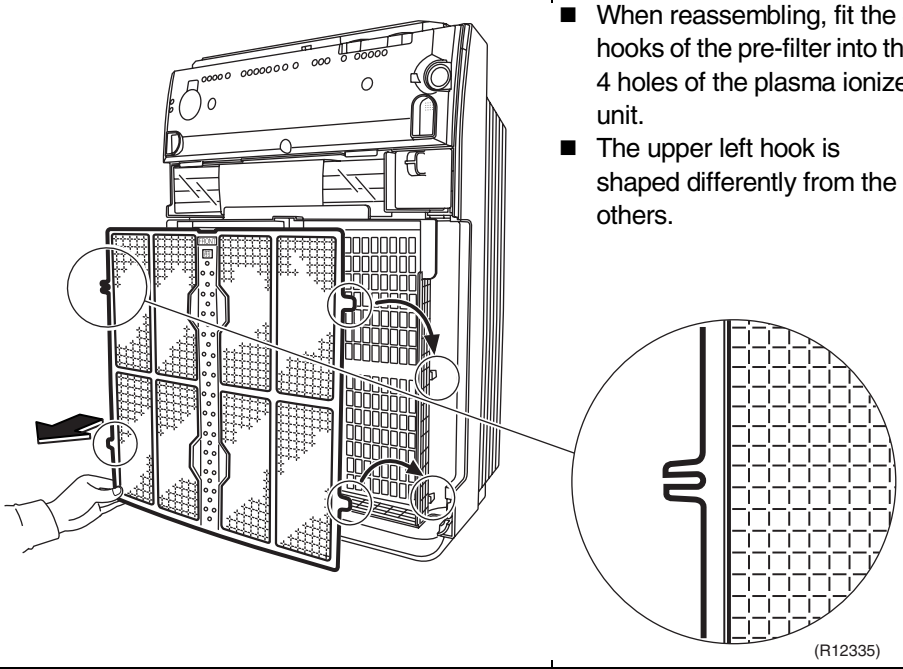 | ■ When reassembling, fit the 4 hooks of the pre-filter into the 4 holes of the plasma ionizer unit.<br>■ The upper left hook is shaped differently from the others. |
| 4. Remove the plasma ionizer unit. | | | ■ To prevent the air purifier from falling down, support the air purifier while removing the plasma ionizer unit. |
| 1 | Hold the handles of the plasma ionizer unit. Pull the plasma ionizer unit to unfasten the hooks and lift it up to remove. | 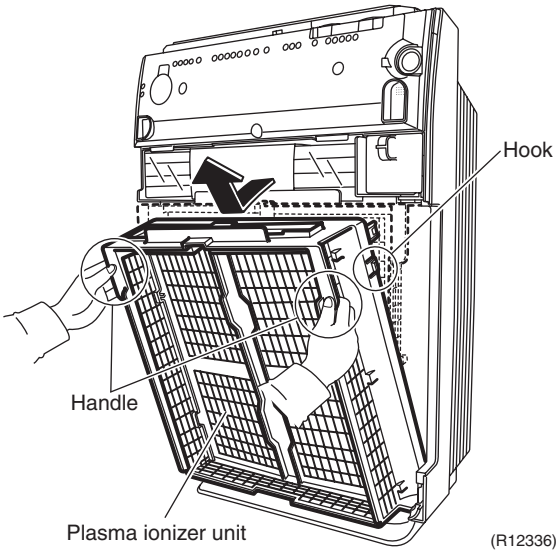 | |

| Step | Procedure | | Points |
|---|---|---|---|
| 2 | The figure shows the shape of hook. | 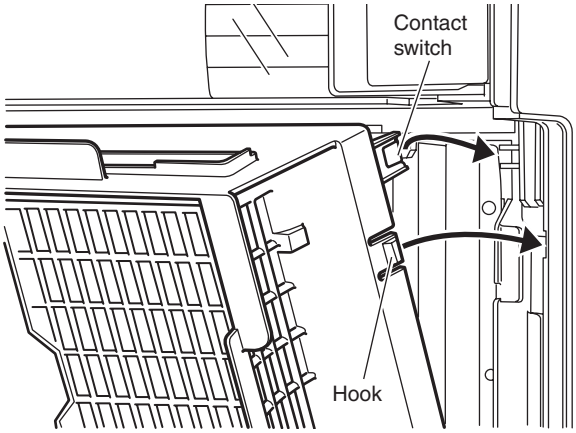 <br> 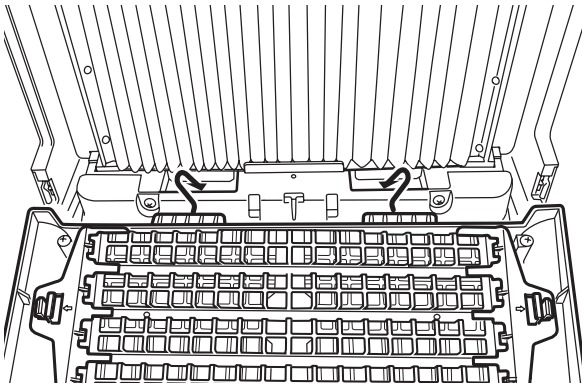 | ■ The plasma ionizer unit has a hook on each side.<br><br>■ When reassembling, catch the 2 lower hooks first. |
| 5. Replace the pleated filter. | | | ■ The pleated filter can be removed even if the deodorizing catalyst unit is installed in the air purifier. |
| 1 | Hold the tabs marked “PULL” of the deodorizing catalyst unit.<br>Pull the deodorizing catalyst unit and lift up to remove. | 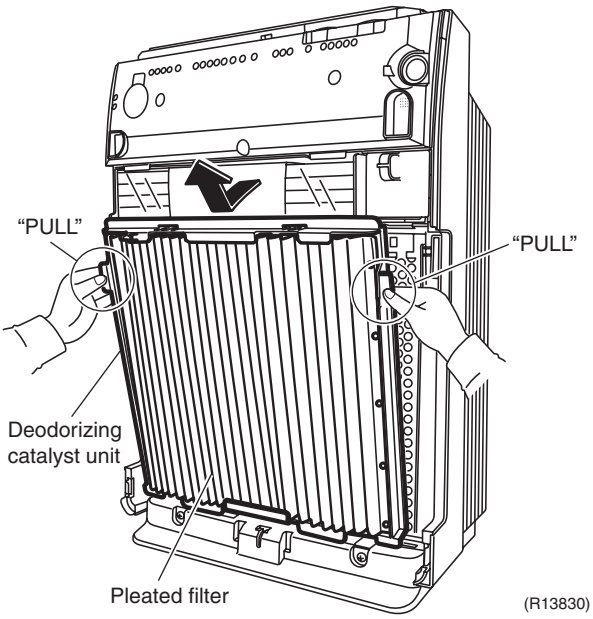 | |

| Step | Procedure | | Points |
|---|---|---|---|
| | | 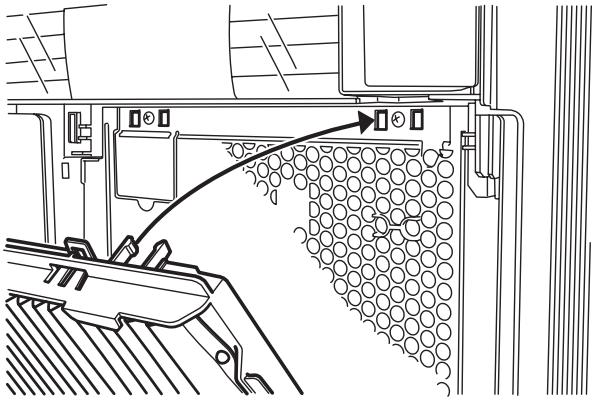 (R12340) | ■ When reassembling, insert the 4 lower hooks of the deodorizing catalyst unit into the grooves of the air purifier, then push the upper side firmly until it “clicks”. |
| 2 | Remove the pleated filter from the projections (10 in total). | 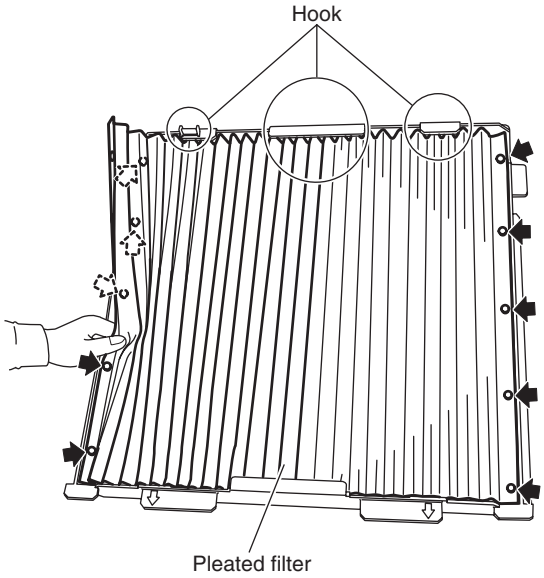  (R12341) | |
| 3 | Unfasten the 3 upper hooks. | 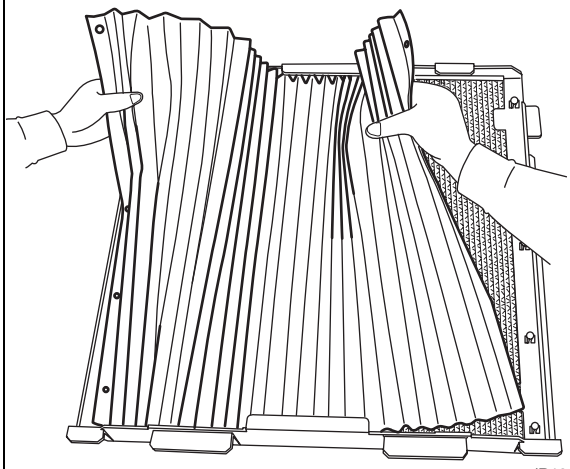 (R13831) | |

| Step | Procedure | | Points |
|---|---|---|---|
| 4 | Unfasten the lower hook and remove the pleated filter. | 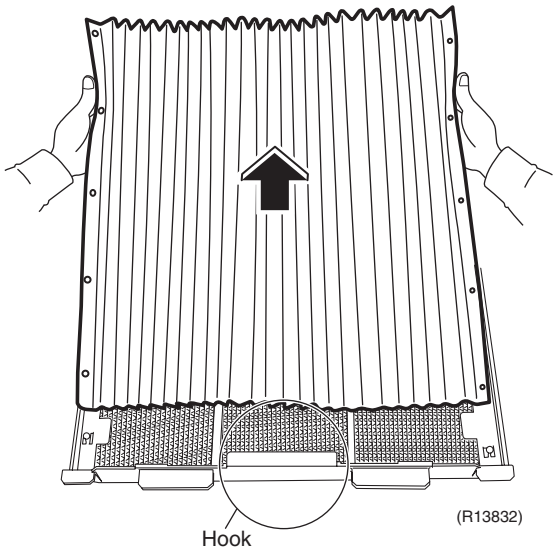 | |
| 5 | Take out the pack of spare filters from the holder. | 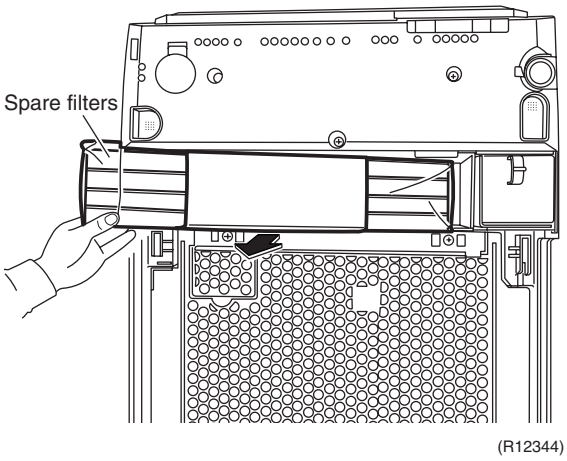 | |
| 6 | Take out a pleated filter and attach it. | 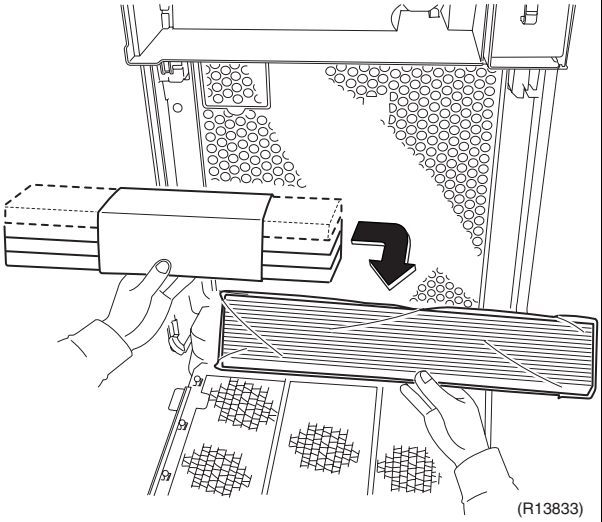 | ■ Set the pleated filter so that its white surface can be seen from the front. |

| Step | Procedure | Points |
|---|---|---|
| 6. Remove the deodorizing catalytic filter. | | |
| 1 | Unfasten the 4 hooks of the deodorizing catalyst unit. | |
| 2 | Raise the deodorizing catalytic filter from the base and remove it. | ■ When reassembling, fit the lower hooks first, and then bend and press the deodorizing catalytic filter to install completely.<br>■ The deodorizing catalytic filter can be removed, but do not wash it, or it cannot be reused. |

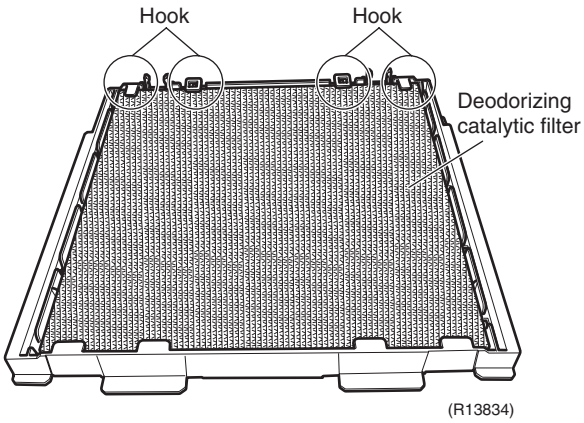


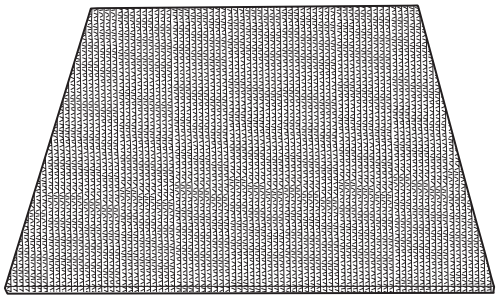

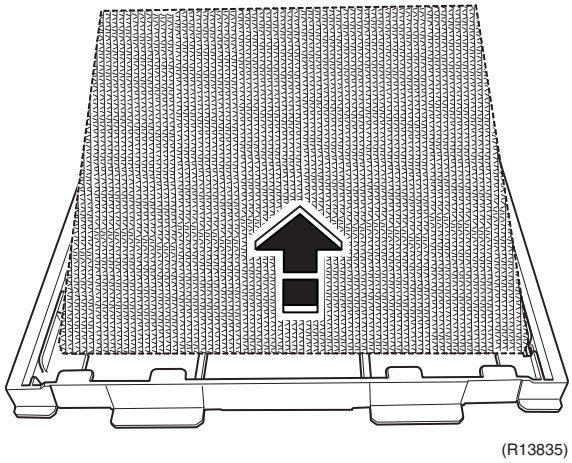

| Step | Procedure | Points |
|---|---|---|
| 7. Remove the fan guard. | | |
| 1 | Remove the 2 upper screws. 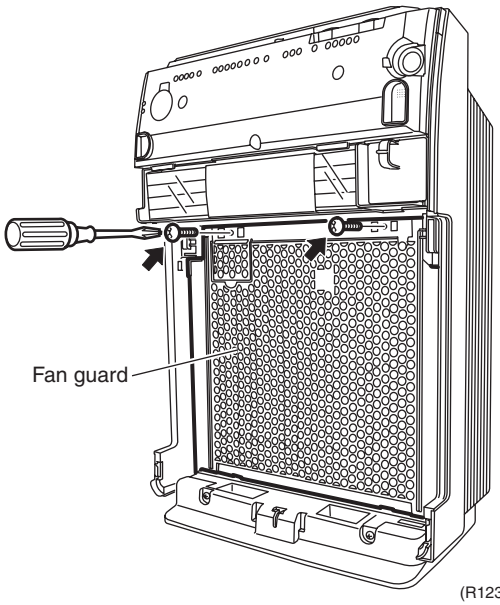  (R12346) | |
| 2 | Unfasten the 2 lower hooks and remove the fan guard. 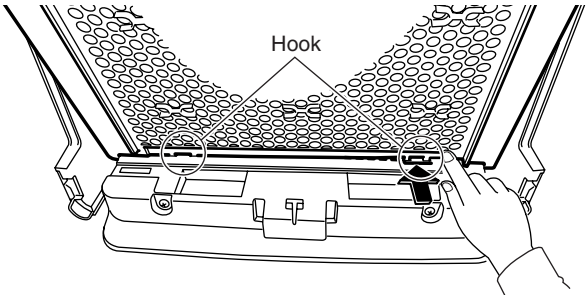  (R12347) 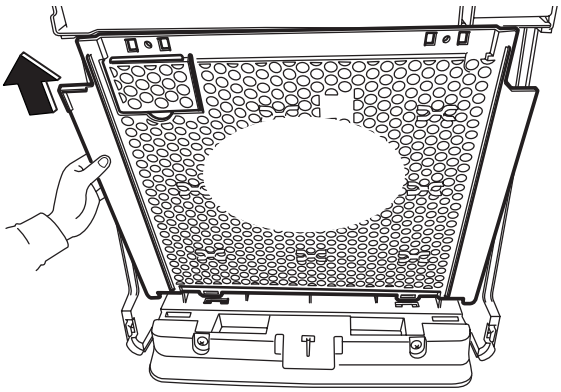 (R12348) 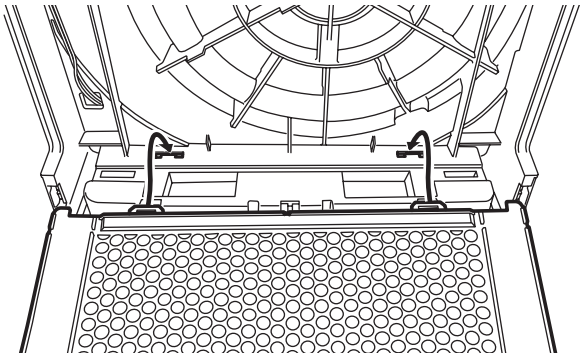 (R12349) | ■ When reassembling, fit the lower hooks first. |

# 9.2 Removal of Streamer Unit

**Procedure**

**Warning** **Be sure to wait for 10 minutes or more after turning off all power supplies before disassembling work.**

| Step | Procedure | | Points |
|---|---|---|---|
| 1 | Pull out the streamer unit. | 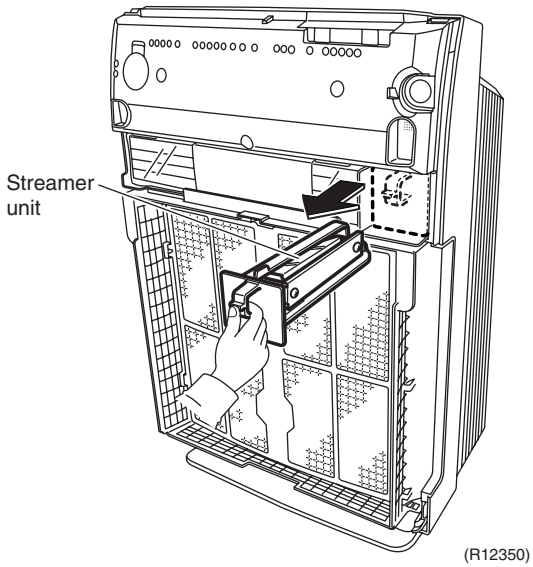 | **Caution**<br>Do not disassemble the streamer unit.<br>Replace it as a unit. |

# 9.3 Removal of Ionized Wire

**Procedure**

**Warning** **Be sure to wait for 10 minutes or more after turning off all power supplies before disassembling work.**

| Step | Procedure | | Points |
|---|---|---|---|
| 1 | Unfasten the 2 hooks and lift the opposing pole plate to detach. | 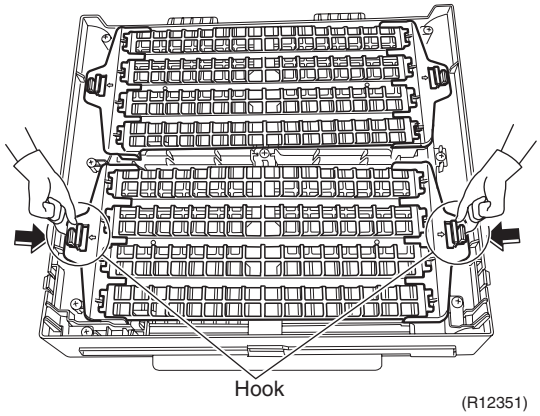 <br> 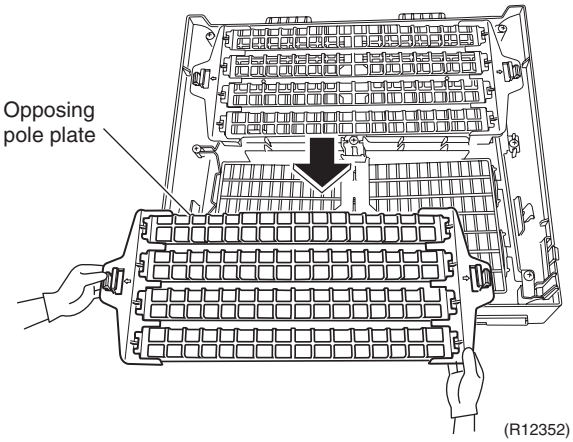 | ■ The opposing pole plate has the same shape in 4 directions. |
| 2 | Pinch and detach the ionized wires with pincers. | 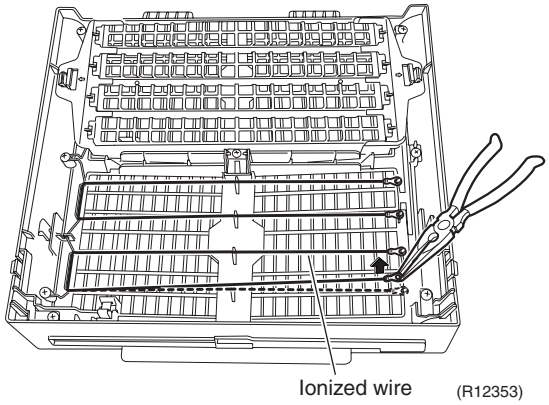 | **Caution**<br>Be careful not to get your hands cut by the ionized wires.<br>■ Once removed, the ionized wires cannot be reused.<br>■ When cleaning the ionized wires, do not remove them. (Refer to the Operation Manual.) |
| 3<br>4 | Remove the 3 screws and remove the ionized wire mounting frame and contact switch.<br>Remove the 3 screws and remove the contact switch for ionized wire. | 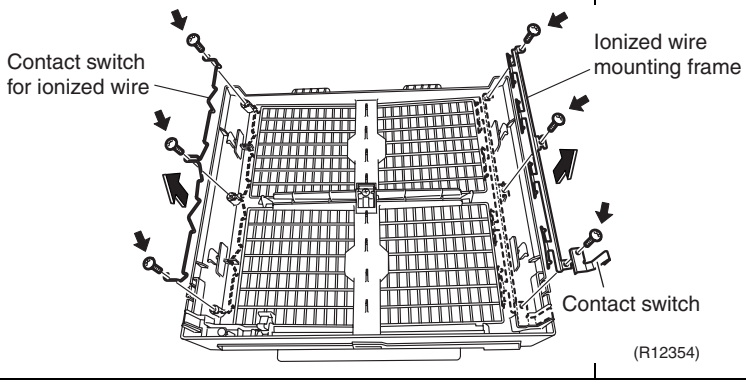 | |

# 9.4 Removal of Control / Display PCB

**Procedure**

**Warning** **Be sure to wait for 10 minutes or more after turning off all power supplies before disassembling work.**

| Step | Procedure | | Points |
|---|---|---|---|
| 1 | Remove the 3 screws of the display cover ASSY. | 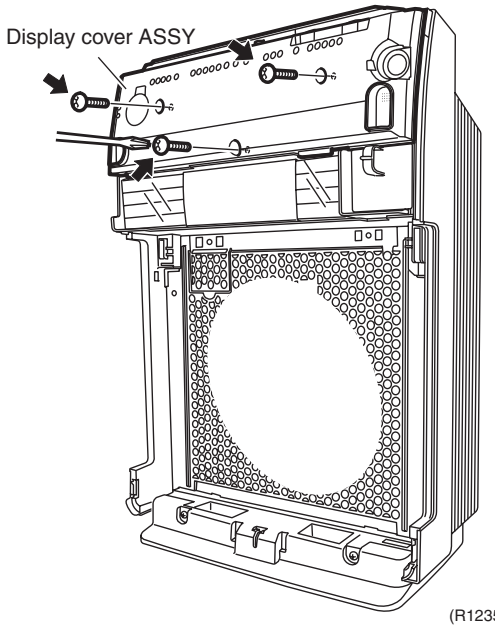 | |
| 2 | Pull the display cover ASSY. | 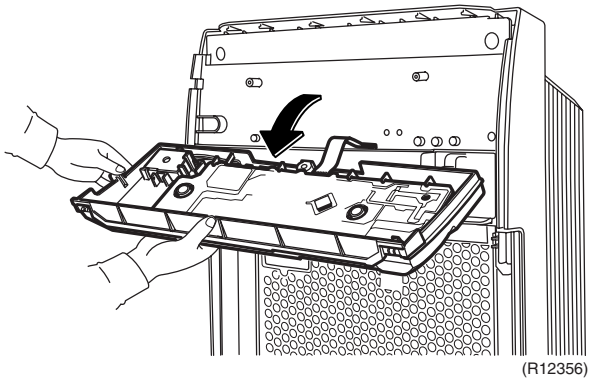 | |
| 3 | Disconnect the relay connector [S128] from the control / display PCB. | 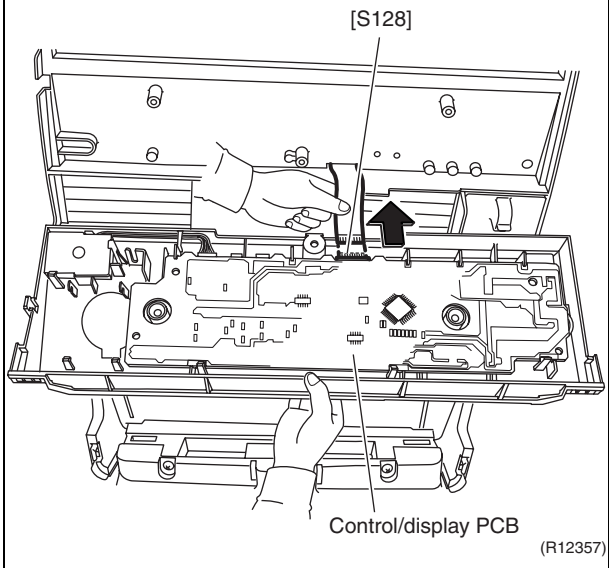 | ■ When reassembling, connect the relay connector securely until the blue part is not to be seen. |

| Step | Procedure | | Points |
|---|---|---|---|
| 4 | Unfasten the 4 hooks. | 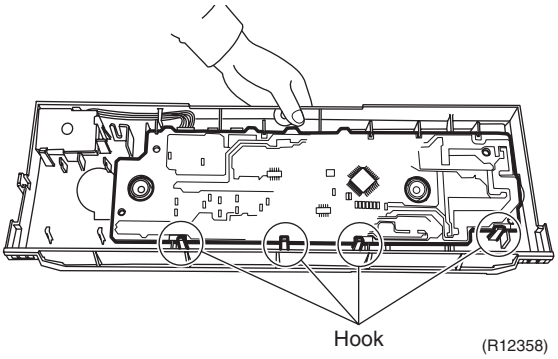 | |
| 5 | Disconnect the connector for the dust sensor [S1] and remove the control / display PCB. | 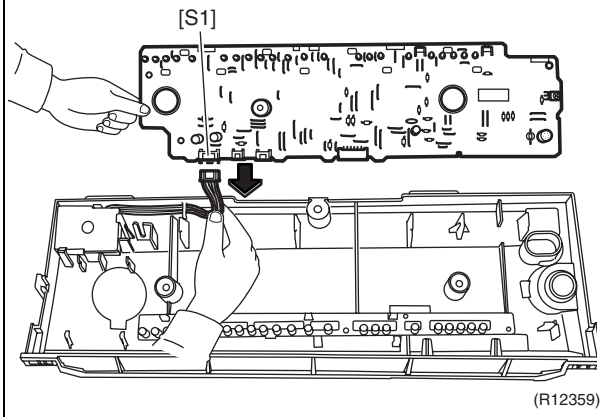 | |
| 6 | The figure shows the control / display PCB. | 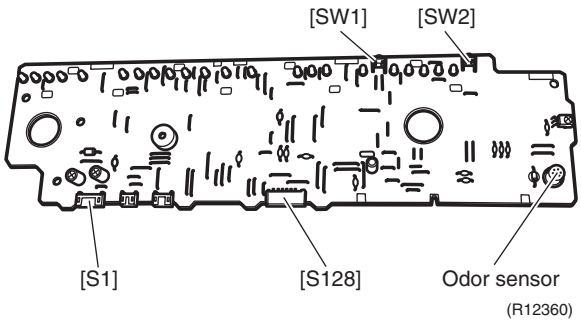 | [S1]: dust sensor<br>[S128]: power supply PCB<br>[SW1]: main switch<br>[SW2]: filter reset switch |
| 7 | Unfasten the 2 hooks and remove the dust sensor. | 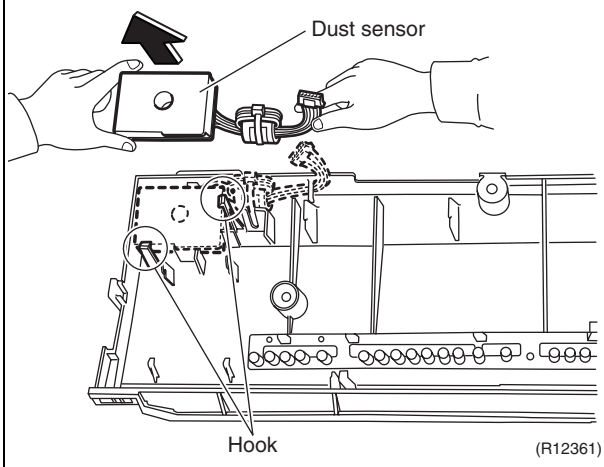 | |

# 9.5 Removal of Fan Motor

**Procedure**

**Warning** **Be sure to wait for 10 minutes or more after turning off all power supplies before disassembling work.**

| Step | Procedure | | Points |
|---|---|---|---|
| 1. Remove the back cover. | | 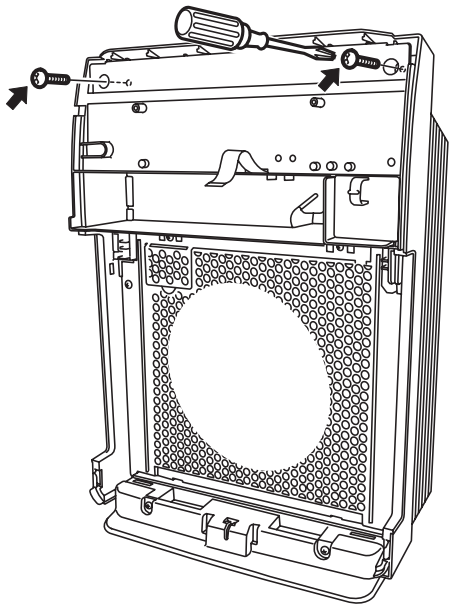 (R12362) | **Preparation**<br>■ Remove the display cover ASSY according to “Removal of Control / Display PCB”. |
| 1 | Remove the 2 screws from the front top and the 3 screws from the back cover. | 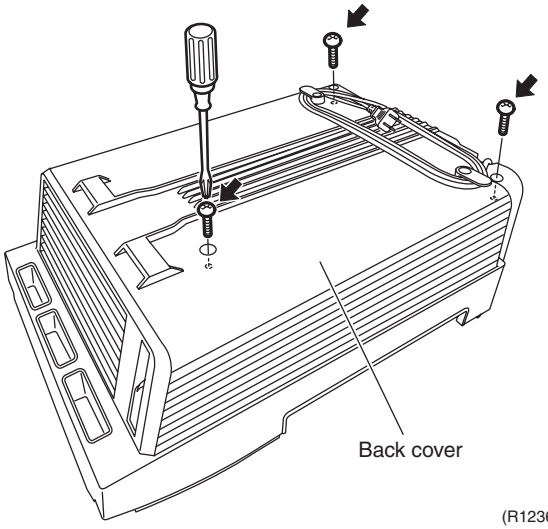 (R12363) | |
| 2 | Untie the power cord. | 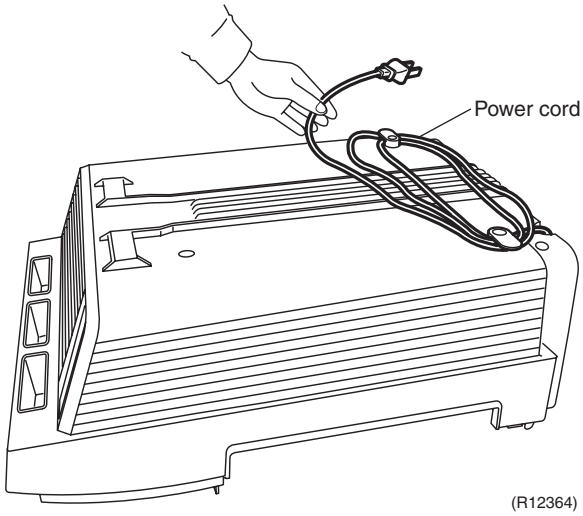 (R12364) | |

| Step | Procedure | | Points |
|---|---|---|---|
| 3 | Remove the back cover. | 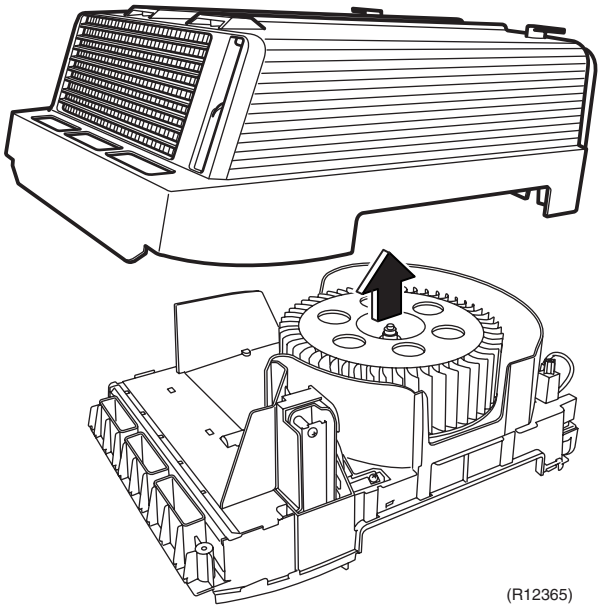 (R12365) | |
| 2. Remove the fan motor. | | | |
| 1 | Remove the screw and remove the shield plate. | 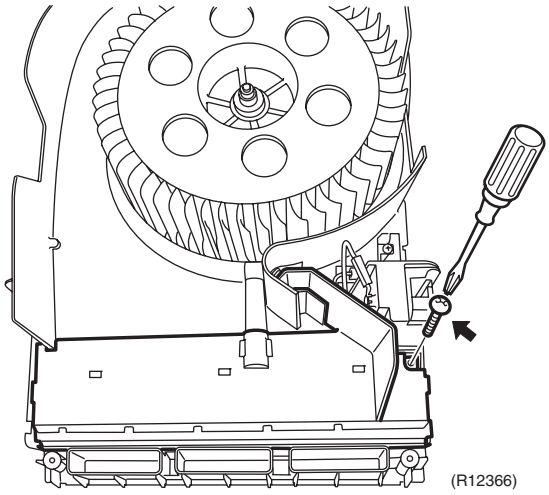 (R12366) 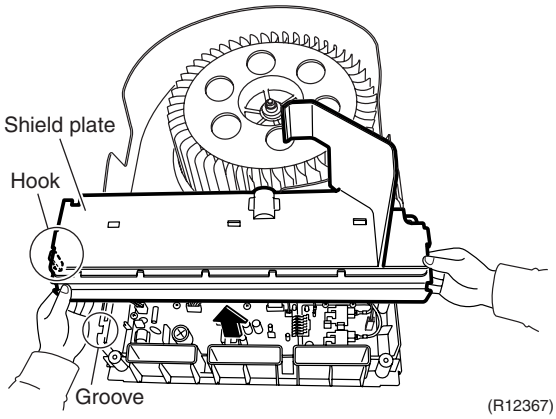  (R12367) | ■ When reassembling, insert the left hook into the groove. |

| Step | Procedure | | Points |
|---|---|---|---|
| 2 | The figure shows the wiring of the wire harness. | 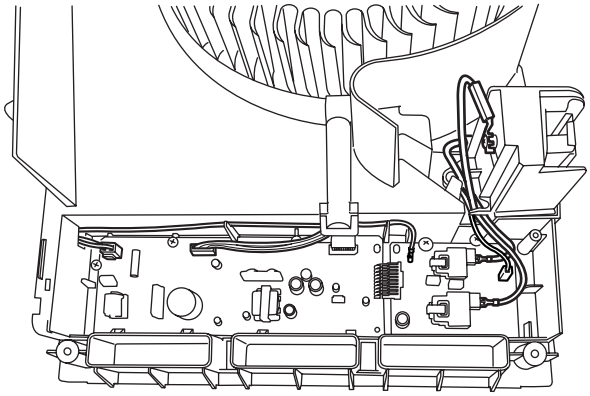 (R12368) | |
| 3 | Disconnect the connector for the fan motor [S2]. | 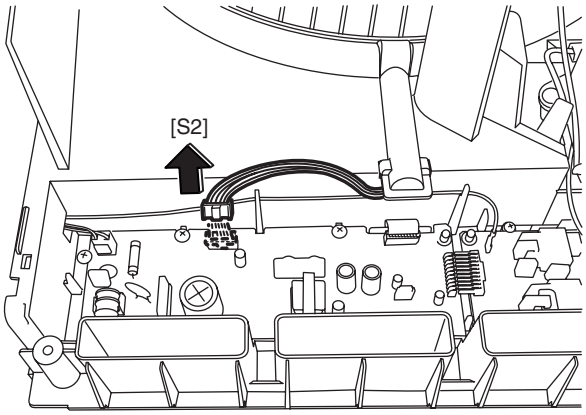  (R12369) | |
| 4 | Unscrew the nut and pull out the fan. | 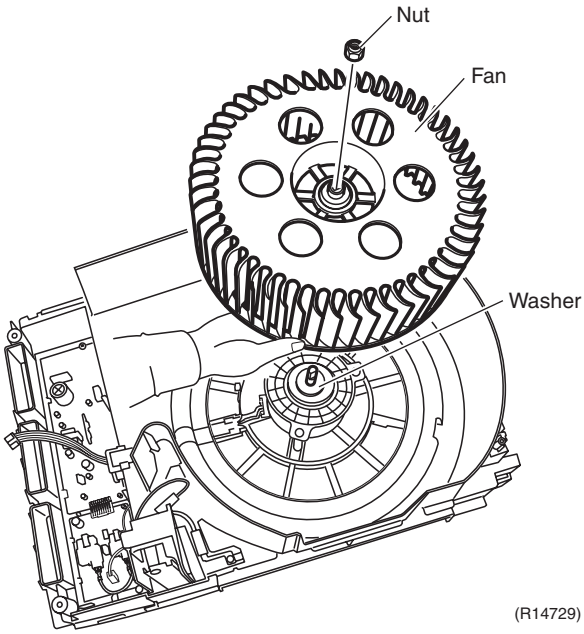  (R14729) | ■ When reassembling, align the ▼ mark on the fan with the D cut on the motor shaft. 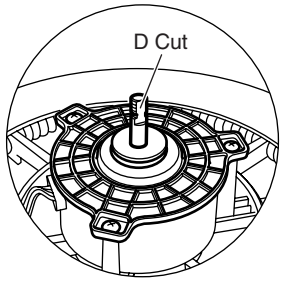  (R7768) ■ Nut size: M8 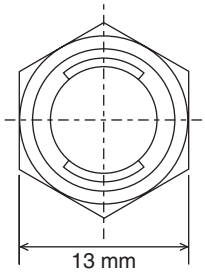  (R12371) |

| Step | Procedure | | Points |
|---|---|---|---|
| 5 | Pull the harness retainer and lift it up to remove. | 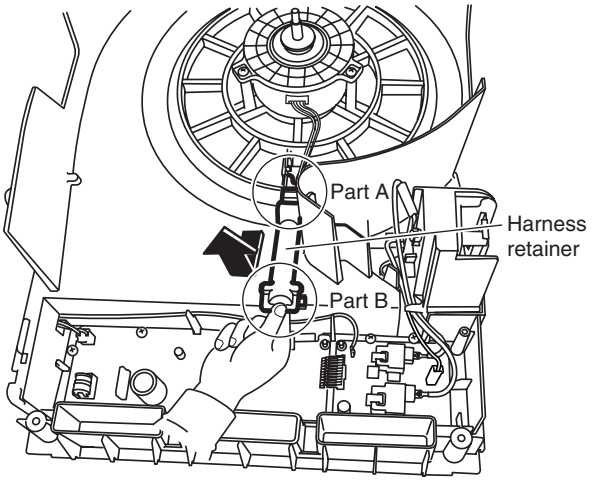 <br>(R14655) | ■ When reassembling, put the part A first in the groove, and then slide the part B along the way.<br>■ Be careful not to strain nor to catch the harness at the part A. |
| 6 | Remove the 3 screws from the fixing plate and remove the fan motor. | 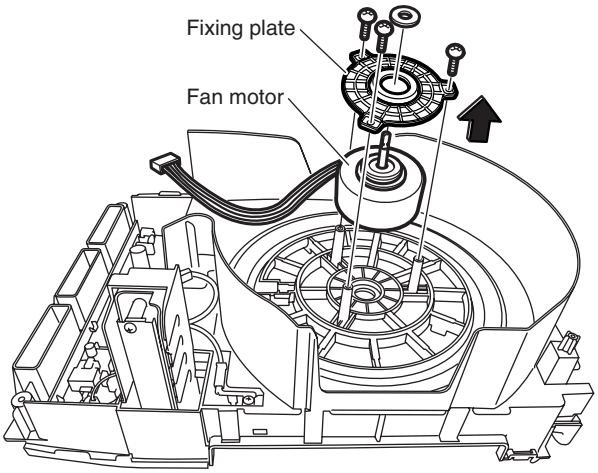 <br>(R12373) | ■ The motor and the harness are integrated together.<br>■ Make sure that the washer is not left behind the fan. |

# 9.6 Removal of Power Supply PCB / High Voltage PCB

**Procedure**

**Warning** **Be sure to wait for 10 minutes or more after turning off all power supplies before disassembling work.**

| Step | Procedure | | Points |
|---|---|---|---|
| 1 | Disconnect the connector for the power supply [S8]. | 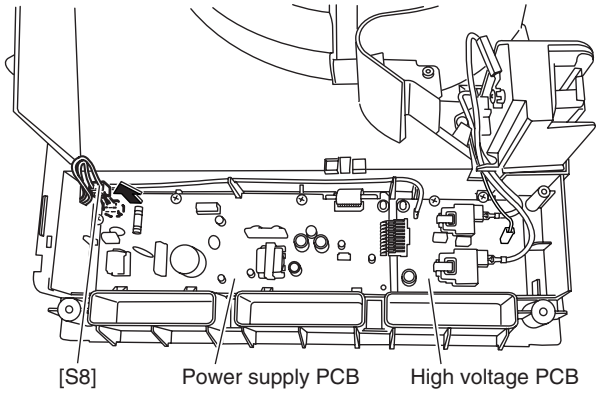 (R12374) | |
| 2 | Disconnect the joint connector [S401]. | 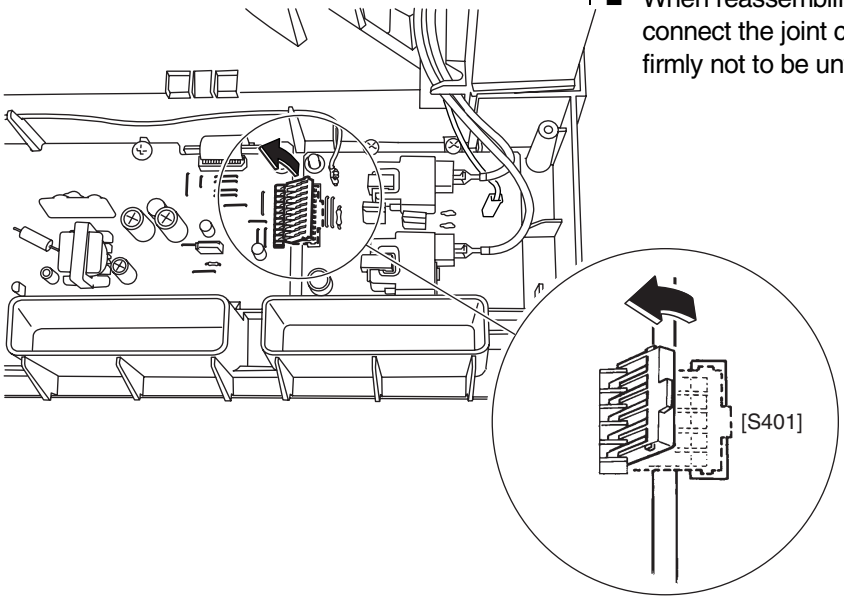 (R12375) | ■ When reassembling, connect the joint connector firmly not to be unfastened. |
| 3 | Disconnect the relay connector [S127]. | 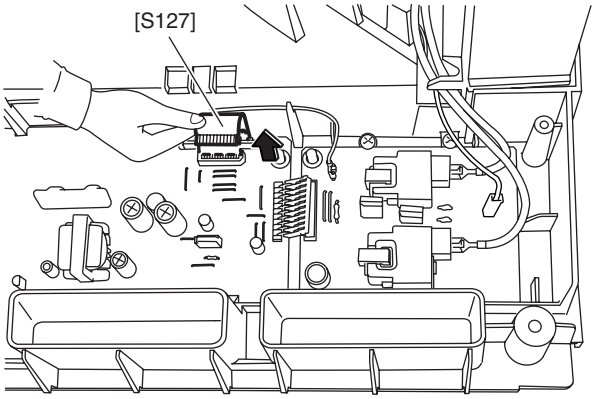 (R12376) | |

| Step | Procedure | | Points |
|---|---|---|---|
| 4 | Disconnect the 2 GND connectors (green). | 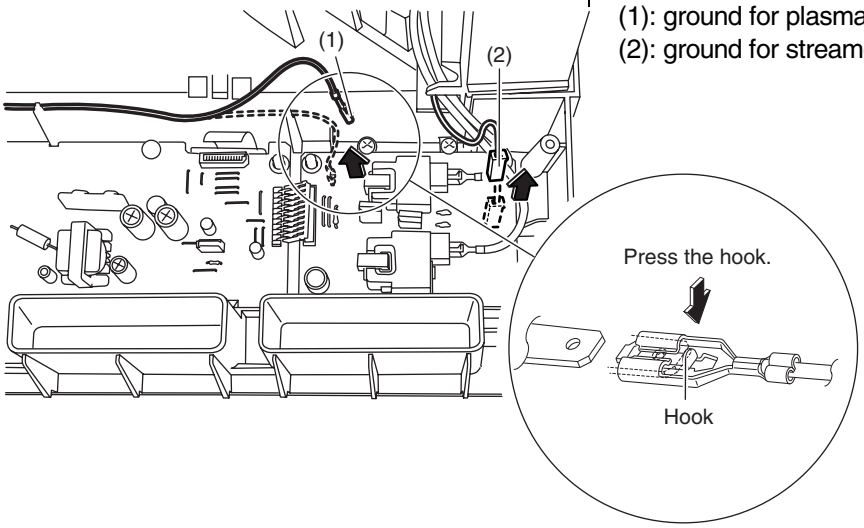 <br>(R14730) | (1): ground for plasma ionizer<br>(2): ground for streamer unit |
| 5 | Remove the 2 screws. | 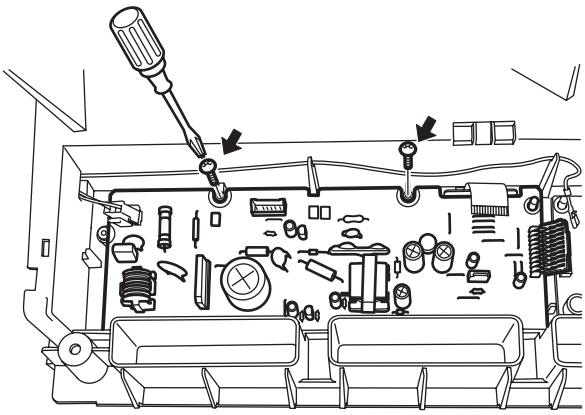 <br>(R12377) | |
| 6 | Lift up the upper part of the power supply PCB and unfasten the hook. Then remove the power supply PCB. | 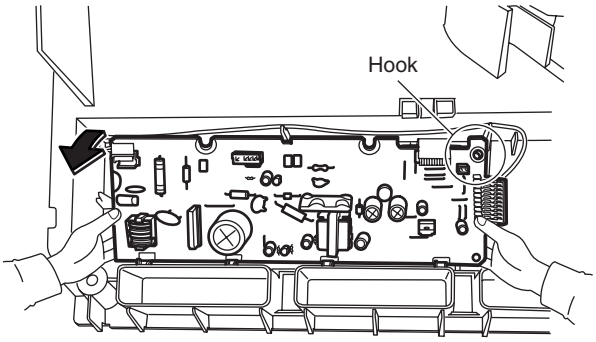 <br>(R12378)<br> 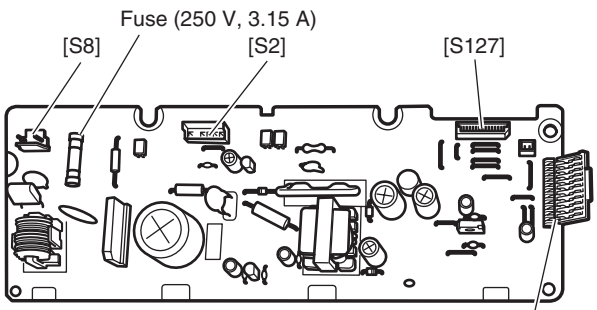 <br>(R12379) | [S2]: fan motor<br>[S8]: power supply<br>[S11]: joint connector for high voltage PCB<br>[S127]: control/display PCB |

| Step | Procedure | | Points |
|---|---|---|---|
| 7 | Remove the screw. | 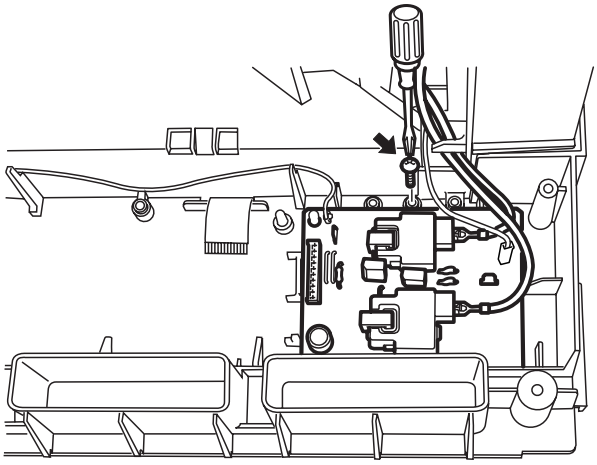 (R12380) | |
| 8 | Unfasten the hook and remove the high voltage PCB. | 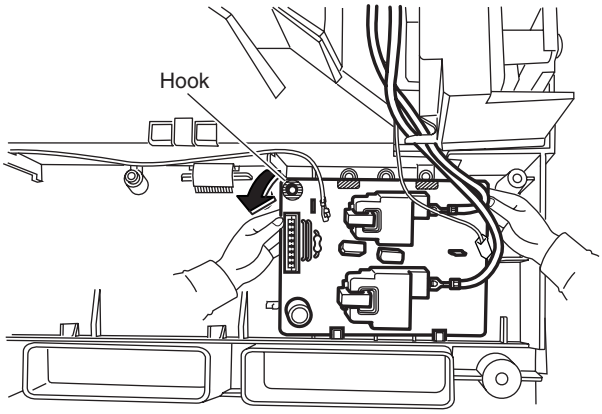  (R12381) | |
| 9 | Disconnect the 2 connectors.<br>Red : plasma ionizer<br>White : streamer unit | 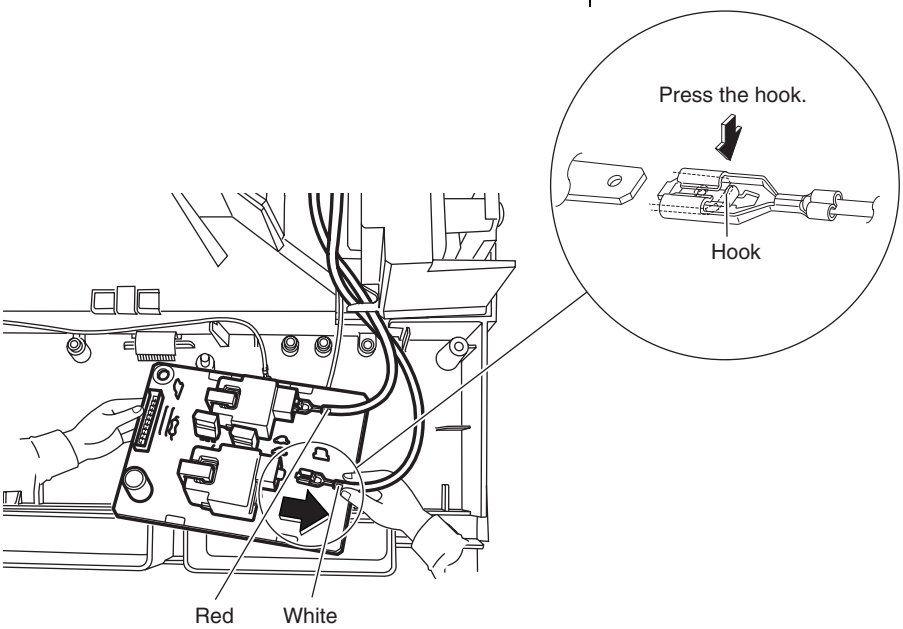  (R14731) | |

# 9.7 Removal of Power Cord

**Procedure**

**Warning** **Be sure to wait for 10 minutes or more after turning off all power supplies before disassembling work.**

| Step | Procedure | | Points |
|---|---|---|---|
| 1 | Remove the 2 screws from the front side. | 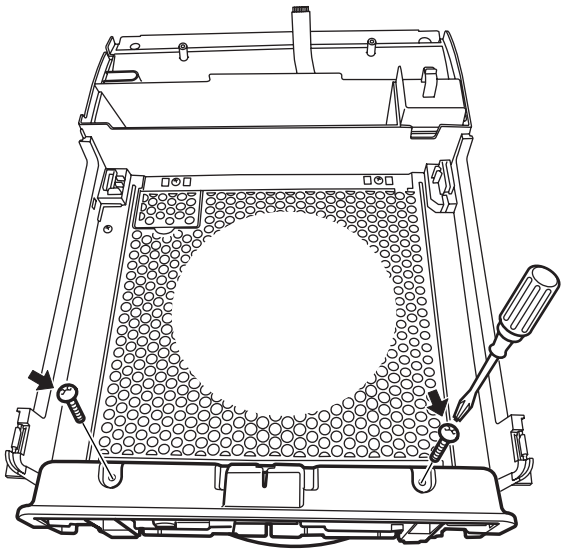 (R12383) | |
| 2 | Pull the base ASSY out. | 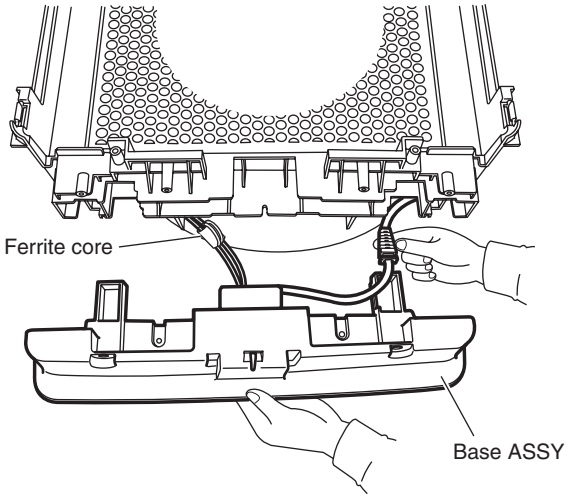  (R14656) | ■ Peel off the filament tape and release the ferrite core at the backside. 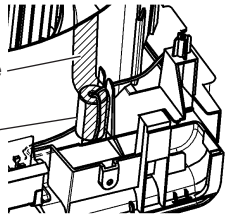  (R12386) |
| 3 | Remove the switch cover. | 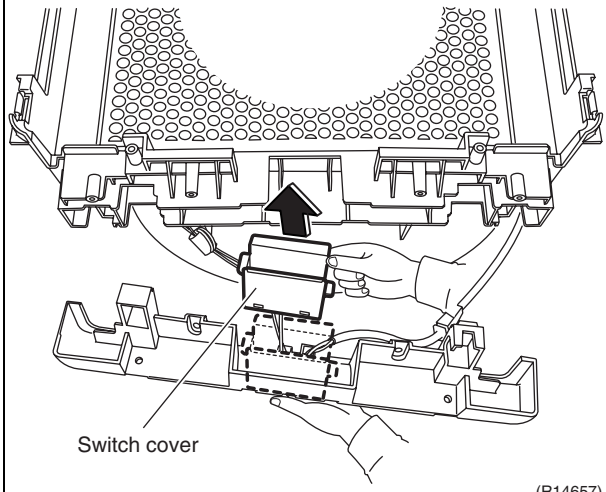  (R14657) | |

| Step | Procedure | | Points |
|---|---|---|---|
| 4 | Holding the convex section and remove the safety switch ASSY. | 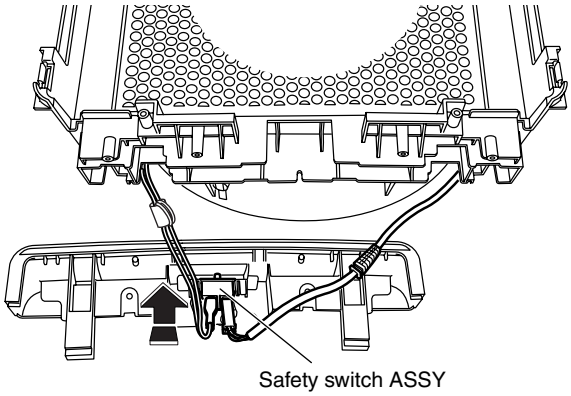 (R14658) 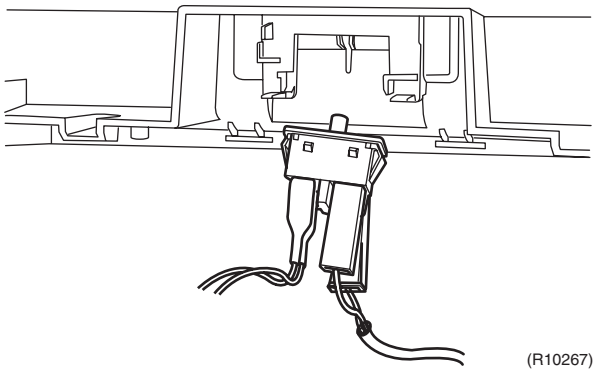 (R10267) | 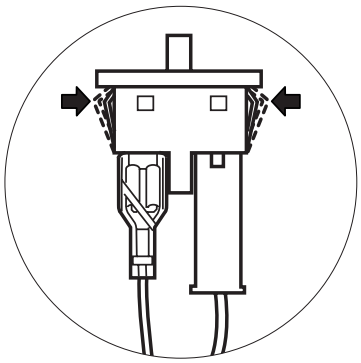 (R12388) |
| 5 | Disconnect the connectors 1 and 3. | 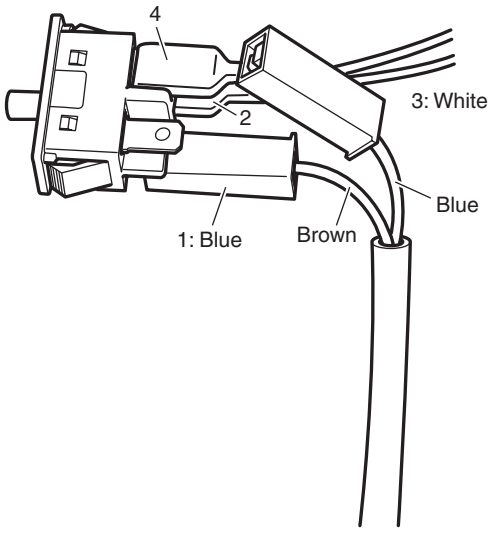 (R14732) | ■ As a service part, a safety switch ASSY has lead wires on 2 and 4. 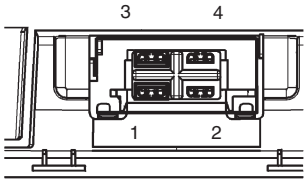 (R10261) |

**Warning**

- Daikin products are manufactured for export to numerous countries throughout the world. Prior to purchase, please confirm with your local authorised importer, distributor and/or retailer whether this product conforms to the applicable standards, and is suitable for use, in the region where the product will be used. This statement does not purport to exclude, restrict or modify the application of any local legislation.
- Use only those parts and accessories supplied or specified by Daikin.
- Read the User's Manual carefully before using this product. The User's Manual provides important safety instructions and warnings. Be sure to follow these instructions and warnings.

If you have any enquiries, please contact your local importer, distributor and/or retailer.

JMI-0107

Organization:
DAIKIN INDUSTRIES, LTD.
AIR CONDITIONING MANUFACTURING DIVISION

Scope of Registration:
THE DESIGN/DEVELOPMENT AND MANUFACTURE OF COMMERCIAL AIR CONDITIONING, HEATING, COOLING, REFRIGERATING EQUIPMENT, COMMERCIAL HEATING EQUIPMENT, RESIDENTIAL AIR CONDITIONING EQUIPMENT, HEAT RECLAIM VENTILATION, AIR CLEANING EQUIPMENT, MARINE TYPE CONTAINER REFRIGERATION UNITS, COMPRESSORS AND VALVES.

JQA-1452

Organization:
DAIKIN INDUSTRIES (THAILAND) LTD.

Scope of Registration:
THE DESIGN/DEVELOPMENT AND MANUFACTURE OF AIR CONDITIONERS AND THE COMPONENTS INCLUDING COMPRESSORS USED FOR THEM

EC99J2044

All of the Daikin Group's business facilities and subsidiaries in Japan are certified under the ISO 14001 international standard for environment management.

**Dealer**

**DAIKIN INDUSTRIES, LTD.**
Head Office:
Umeda Center Bldg., 2-4-12, Nakazaki-Nishi, Kita-ku, Osaka, 530-8323 Japan

Tokyo Office:
JR Shinagawa East Bldg., 2-18-1, Konan, Minato-ku, Tokyo, 108-0075 Japan

http://www.daikin.com/global_ac/

©All rights reserved

●Specifications, designs and other content appearing in this brochure are current as of April 2011 but subject to change without notice.

SiBE811120
Printed in Japan 04/2011 B AK